LAWRENCE BERKELEY LABORATORY - UNIVERSITY OF CALIFORNIA **ENGINEERING NOTE**		CODE SR0209	SERIAL M7548	STAR doc# ST 0269	PAGE 1 OF 27
AUTHOR Bob Caylor	DEPARTMENT ENGR/NSD - STAR	DATE June 20, 1995		STAR WBS# 4.2.9	

Safety Note File Number SN 95-003

Mechanical Engineering Safety Note

PROGRAM-PROJECT-JOB

RHIC-STAR-TPC - Transport Fixtures/Shipping

TITLE

TPC Lifting Fixture

Safety Note File Number SN 95-003

Prepared by: Robert J Caylor Date 12/14/95

Bob Caylor Mechanical Designer, STAR Group

Reviewed by: Russell Wells Date 2/6/96

Russell Wells Mechanical Engineer, STAR Group

Date 10/18/96

Peter Neubauer LBL Hoist/Crane Engineer

Approved by: Gerd Behrsing Date 12-22-95

Gerd Behrsing, Mechanical Engineering Safety Subcommittee

Distrubution

William Edwards, Project Mechanical Engineer
Russell Wells, Project Mechanical Engineer
Peter Neubauer, LBL Hoist/Crane Engineer MS 90S
Gerd Behrsing, M. E. Safety Subcommittee
Mechanical Engineering Safety File

1.0 Introduction

Safety Note File Number SN 95-003

The TPC is supported in the STAR Detector by (4) support brackets mounted on the TPC Wheel and End Rings. The brackets are located on the horizontal center line at each end of the TPC. (fig.1) During assembly at LBL, shipping to BNL, and installation into the STAR Detector Assembly, any required lifting of the TPC will be done at these 4 points. During assembly at LBL, shipping to BNL, and prior to final installation into the STAR Detector, the TPC is supported at these 4 points by the TPC Test Stand. For longitudinal stability, the Test Stand is also connected to the TPC on the lower vertical centerline at each end. None of the TPC weight is carried at these (2) points. (fig 1a) Any lifting of the TPC will include the TPC test stand.
The lifting arrangement for the TPC and TPC Test Stand is shown in fig 1. Two (2) longitudinal lifting beams attach to the TPC Test Stand by flexible links and pins which are attached to 0 - 20,000 lb capacity dynamometers at each end of the TPC. (fig 1b) The lifting beams are connected to a spreader beam by turnbuckles with jaw end fittings and lifting ears. The spreader beam is lifted in line with the geometric center of the TPC by a crane or hoist. No horizontal compressive load is exerted on the TPC during lifting.
Lifting loads are equalized by adjusting turnbuckles and Dynamometers. (fig 1b) The total weight of the TPC, Support Stand, and Lifting fixture is 27,900 lbs.

Structural analysis of the TPC Support Brackets is covered in Star Note 0117 "Sizing of TPC/Magnet Iron Support Structures".

The design of this lifting fixture adheres to the rules of PUB 3000 Ch5, LIFTING FIXTURES.

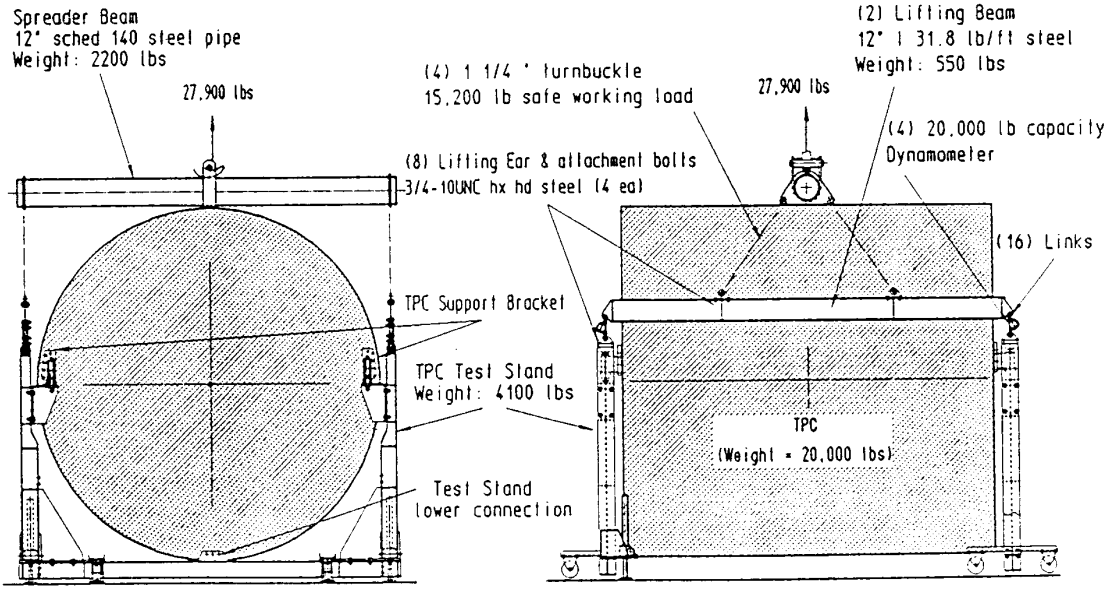

(a) End View (b) Elevation View

Figure 1 TPC with Lifting Fixture in place

2.0 Spreader Beam (24A6273)

2.1 Design Considerations

The Spreader Beam carries the entire load of the TPC, Support Stand, and Lift Beams. Possible failure modes include overstress of the beam, lifting strap and pin, and outer (lift beam connetion) ears.

2.2 Calculations.

For this and all subsequent calculations a design value of 27,900 lbs for the weight of the entire TPC Assembly and Lifting Arrangement will be used.

2.2.1 Stresses

Under maximum load conditions the Spreader Beam is loaded as a simple beam with a concentrated load at the center, and a additional load equal to the weight of the beam distributed uniformly over the length of the beam.

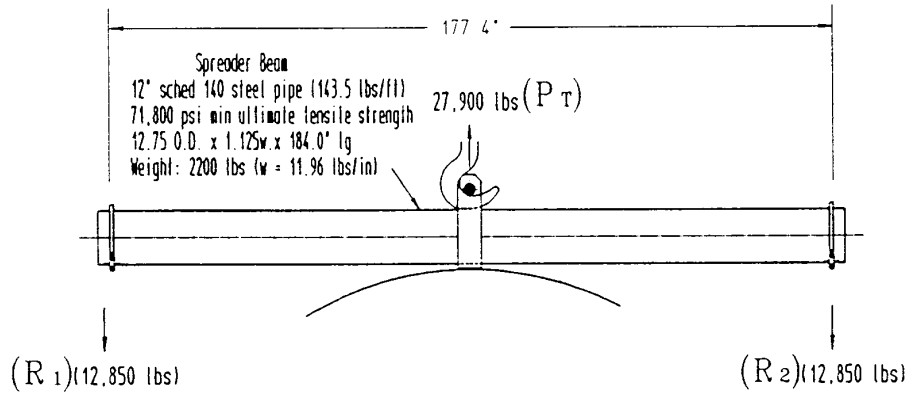

Figure 2 Spreader Beam load distrbution

2.2.1.1 Bending Stress

$$I_{SB} = \frac{\pi(D^4 - D^4)}{64} = \frac{\pi}{64}\left(\overline{\quad}^4 - \overline{\quad}^4\right) = \underline{\quad 700.0 \quad} \text{ in}^4 \qquad I_{SB}$$

From Load: $M_L = \frac{PL}{4} = \frac{(27{,}900 - 2{,}200)177.4}{4} = \underline{1{,}139{,}800}$ lb-in $\qquad M_L$

From Beam weight: $M_{BM} = \frac{wL^2}{8} = \frac{11.96\ (177.4)}{8} = \underline{47{,}050}$ lb-in $\qquad M_{BM}$

Total Bending Moment: $M_{TOT} = M_L + M_{BM} = \underline{1{,}186{,}850}$ lb-in $\qquad M_{TOT}$

$$f_{SB} = \frac{Mc}{I} = \frac{1{,}186{,}850 \times 6.38}{700.0} = 10{,}820 \text{ psi} \qquad f_{SB}$$

For A106 steel S_{ult} = 71,800.
Safety factor = 71,800/10,820
SF = 6.64 (ok - greater than 5) SF_{SB}

2.2.1.2 Deflection

$$\Delta_L \text{ (from load)} = \frac{Pl^3}{48EI} = \frac{(27{,}900-2{,}200) \times 177.4^3}{48 \times 30 \times 10^6 \times 700.0} = 0.142 \text{ in} \qquad \Delta_L$$

$$\Delta_{BM} \text{(from beam)} = \frac{5wl^4}{384EI} = \frac{5 \times 11.96 \times 177.4^4}{384 \times 30 \times 10^6 \times 700.0} = 0.007 \text{ in} \qquad \Delta_{BM}$$

$$\Delta_{TOTAL} = \Delta_L + \Delta_{BM} = 0.149 \text{ in} \qquad \Delta_{TOTAL}$$

A strap and pin located at the center of the Spreader Beam engages the hook of the crane or hoist used to pick up the TPC. (fig 3.) The maximum pin diameter that will nest in the cradle of a standard 30,000 lb capacity hook is 3.0 inches.

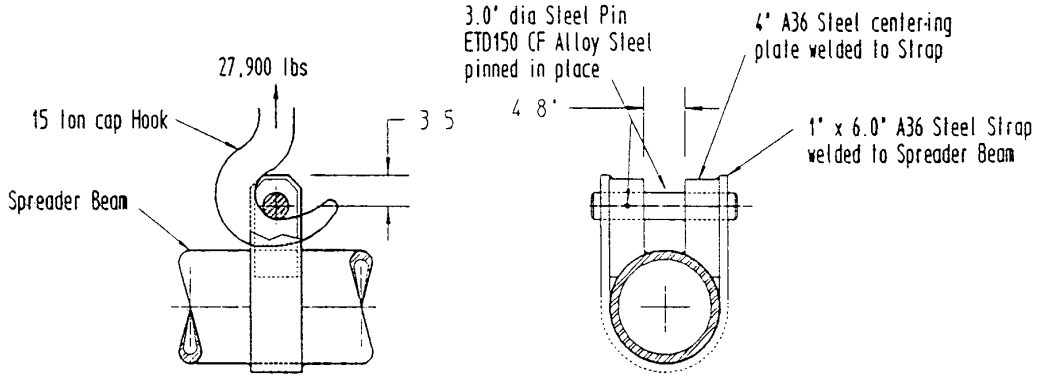

Figure 3 Spreader Beam Strap and Pin

2.2.1.3 Pin Bending Stress

$$I_P = \frac{\pi D^4}{64} = \frac{\pi}{64}\overline{3.0}^4 = \underline{3.98}\ in^4 \qquad I_P$$

Assume that the pin is loaded as a simple beam with a concentrated load at its center.

$$M_P = \frac{PL}{4} = \frac{27{,}900 \times 4.8}{4} = \underline{33{,}480}\ lb\text{-}in \qquad M_p$$

$$f_P = \frac{Mc}{I} = \frac{33{,}480 \times 1.5}{3.98} = \underline{12{,}620}\ psi \qquad f_p$$

2.2.1.4 Pin Shear Stress

$$A_P = \frac{\pi D^2}{4} = \frac{\pi}{4} \times \overline{3.0}^2 = \underline{7.07}\ in^2 \qquad A_P$$

$$S_P = \frac{P}{A} = \frac{27{,}900}{(2) \times 7.07} = \underline{1{,}975}\ psi \qquad S_p$$

2.2.1.5 Combined Bending and Shear stress

To determine the Safety Factor the von Mises stress is used:

$$Y = \left[\frac{(\sigma_X - \sigma_Y)^2 + (\sigma_Y - \sigma_Z)^2 + (\sigma_Z - \sigma_X)^2}{2} + 3\tau_{XY}^2 + 3\tau_{YZ}^2 + 3\tau_{ZX}^2\right]^{\frac{1}{2}}$$

where: $\sigma_X = 0$ $\quad \tau_{XY} = 0$

$\sigma_Y = 0$ $\quad \tau_{YZ} = 1{,}975$ psi

$\sigma_Z = 12{,}620$ psi $\quad \tau_{ZX} = 0$

$$= \underline{13{,}075\ psi} \qquad Y$$

ETD150 steel S_{ult} = 150,000 psi

Safety factor = 150,000/13,075

SF = 11.47 (ok - greater than 5) $\qquad SF_v$

2.2.1.6 Tensile Stress in Strap

$$S_{ST} = \frac{P}{A} = \frac{27{,}900}{2(6.0-3.0) \times 1.0} = \underline{4{,}650\ psi} \qquad S_{ST}$$

A36 steel S_{ult} = 58,000 psi
Safety factor = 58,000/4,650
SF = 12.5 (ok - greater than 5) SF_{ST}

2.2.1.7 Bearing Stress in strap from pin

$$S_{SB} = \frac{P}{A} = \frac{27{,}900}{2 \times 1.0 \times 3.0} = \underline{4{,}650\ psi} \qquad S_{SB}$$

Safety factor = 58,000/4,650
SF = 12.5 (ok - greater than 5) SF_{SB}

2.2.1.8 Tearout Stress in Strap from pin

$$S_{STO} = \frac{P}{A} = \frac{27{,}900}{4 \times 1.0 \times 3.5} = \underline{2{,}000\ psi} \qquad S_{STO}$$

Safety factor = 58,000/2,000
SF = 26 (ok - greater than 5) SF_{STO}

Ears, welded to the ends of the Spreader Beam are connected to the Lift Beams by means of turnbuckles with jaw end fittings. (fig 4)

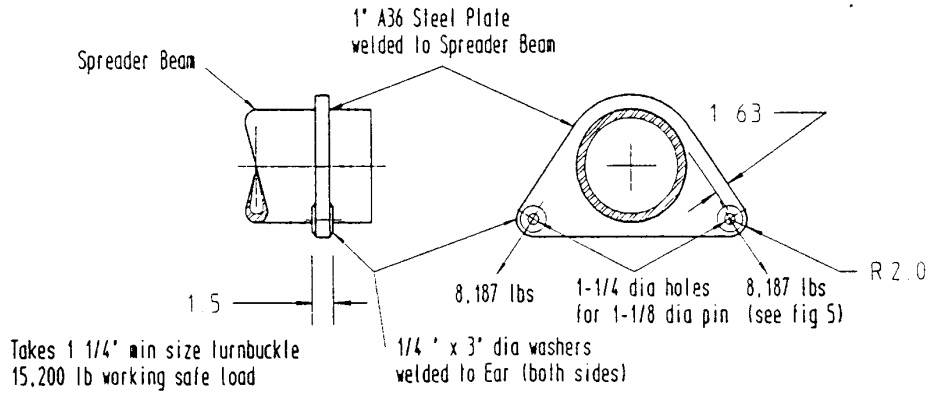

Figure 4 Spreader Beam Outer Ears

2.2.1.9 Tensile Stress in Ear at Spreader Beam

$$S_{EST} = \frac{P}{A} = \frac{8,187}{1.63 \times 1.0} = \underline{5,025\ psi} \qquad S_{EST}$$

Safety factor = 58,000/5,025
SF = 11.5 (ok - greater than 5) SF_{EST}

2.2.1.10 Tensile Stress in Ear at pin hole (neglect washers)

$$S_{EPT} = \frac{P}{A} = \frac{8,187}{2 \times (2-.625) \times 1.0} = \underline{2,980\ psi} \qquad S_{EPT}$$

Safety factor = 58,000/2,980
SF = 19.5 (ok - greater than 5) SF_{EPT}

2.2.1.11 Tearout Stress in Ear from pin (neglect washers)

$$S_{EPTO} = \frac{P}{A} = \frac{8,187}{2(2.0 \times 1.0)} = \underline{2,980\ psi} \qquad S_{EPTO}$$

Safety factor = 58,000/2,980
SF = 28.3 (ok - greater than 5) SF_{EPTO}

2.2.1.12 Pin Bearing Stress in Ear (neglect washers)

$$S_{PB} = \frac{P}{A} = \frac{8,187}{1.125 \times 1.0} = \underline{7,280\ psi} \qquad S_{PB}$$

Safety factor = 58,000/7,280
SF = 8.0 (ok - greater than 5) SF_{PB}

3.0 Lifting Beam (24A6284)

Safety Note File Number SN 95-003

3.1 Design Considerations

Two (2) longitudinal lifting beams attach to the Test Stand by flexible Links (24A6302) and pins at each end of the TPC. The lifting beams connect to the Spreader Beam by means of Lifting Ears (24A6293) and turnbuckles with jaw end fittings. Possible failure modes include overstress of the beam, ears, and links.

3.2 Calculations

For this and all subsequent calculations a design value of 27,900-2,200/2 (12,850 lbs) will be used as the applied load to each lifting beam.

3.2.1 Stresses

Under maximum load conditions the lift beams are loaded as a simple beam with two equal concentrated loads symmetrically placed having both vertical and horizontal components plus a uniformly distributed load equal to the weight of the lift beam.

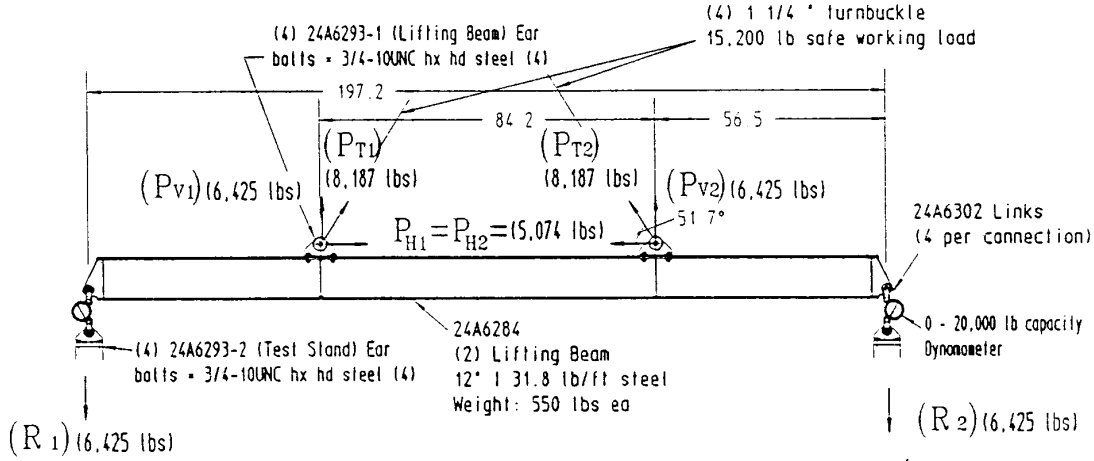

Figure 5 (24A6284) Longitudinal Lifting Beam

3.2.1.1 Bending Stress

For 12" 31.8 I: $I_{LB} = \underline{215.8}\ in^4$ I_{LB}

From Load: $(P_{V1}=P_{V2})$ $M_L = PA = 6,425 \times 56.5 = \underline{363,013}\ lb\text{-}in$ M_L

From Beam weight: $M_{BM} = \frac{wL^2}{8} = \frac{2.65(\overline{197.2})^2}{8} = \underline{12,880}\ lb\text{-}in$ M_{BM}

Total Bending Moment: $M_{TOT} = M_L + M_{BM} = \underline{375,900}\ lb\text{-}in$ M_{TOT}

$$f_{LB} = \frac{Mc}{I} = \frac{375{,}900 \times 6.0}{215.8} = \underline{10{,}450 \text{ psi}} \qquad f_{SB}$$

Compressive stress from horizontal component (P_H)

$$S_{CLB} = \frac{P}{A} = \frac{5{,}074}{9.26} = \underline{550 \text{ psi}} \qquad S_{CLB}$$

Total stress at Lifting Beam center

$$S_{TLB} = f_{SB} + S_{CLB} = 10{,}450 + 550 = \underline{11{,}000 \text{ psi}} \qquad S_{TLB}$$

For ASTM A36-93A steel S_{ult} = 71,000.
Safety factor = 71,000/11,000
SF = 6.45 (ok - greater than 5) SF_{LB}

3.2.1.2 Deflection

$$\Delta_L \text{ (from load)} = \frac{Pa}{24EI}(3l^2 - 4a^2)$$

$$= \frac{6425 \times 56.5}{24 \times 30 \times 10^6 \times 215.8}(3 \times 197.2^2 - 4 \times 56.5^2)$$

$$= \underline{0.243 \text{ in}}. \quad \Delta_L$$

$$\Delta_{BM} \text{(from beam)} = \frac{5Wl^4}{384EI}$$

$$= \frac{5 \times 31.8/12 \times 197.2^4}{384 \times 30 \times 10^6 \times 215.8} = \underline{0.008 \text{ in}} \qquad \Delta_{BM}$$

$$\Delta_{TOTAL} = \Delta_L + \Delta_{BM} = \underline{0.251 \text{ in}} \qquad \Delta_{TOTAL}$$

Stresses at Lifting Beam end

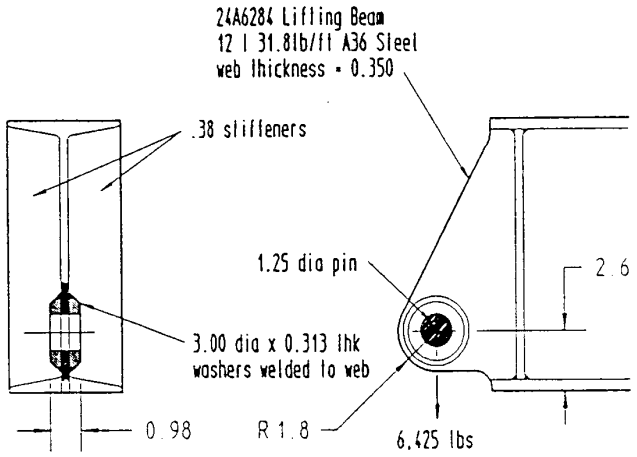

Figure 6 Lift Beam end (Links not shown)

3.2.1.3 Web tearout stress (neglect washers)

$$S_{TOW} = \frac{P}{A} = \frac{6,425}{2(1.8 \times .35)} = \underline{5,100 \text{ psi}} \qquad S_{TOW}$$

Safety factor = 58,000/5,100
SF = 11.37 (ok - greater than 5) SF_{TOW}

3.2.1.4 Pin bearing stress (include washers)

$$S_{BW} = \frac{P}{A} = \frac{6,425}{1.25 \times 1.35} = \underline{3,810 \text{ psi}} \qquad S_{BW}$$

Safety factor = 58,000/3,810
SF = 15.2 (ok - greater than 5) SF_{BW}

3.2.1.5 Shear stress in welds (1/4" fillet welds)

$$S_{SW} = \frac{P}{A} = \frac{6,425}{2(\pi \times 3.0 \times .707 \times .25)} = \underline{3,860 \text{ psi}} \qquad S_{SW}$$

Safety factor = 58,000/3,860
SF = 15.0 (ok - greater than 5) SF_{SW}

Safety Note File Number SN 95-003

4.0 Lifting Beam Links (24A6302)

4.1 Design Considerations

A 20,000 lb capacity Dynamometer is connected each Test Stand corner and Lifting Beam with (4) Lifting Beam Links (24A6302), and (4) Pins 24A6322. (fig 7)
Possible failure modes include tensile, tearout, or bearing stress in link at pin connection.

4.2 Calculations

For this and all subsequent calculations a design value of 6,425 lbs will be used as the applied load.

4.2.1 Stresses

Under maximum load conditions the links are loaded in the vertical direction only.

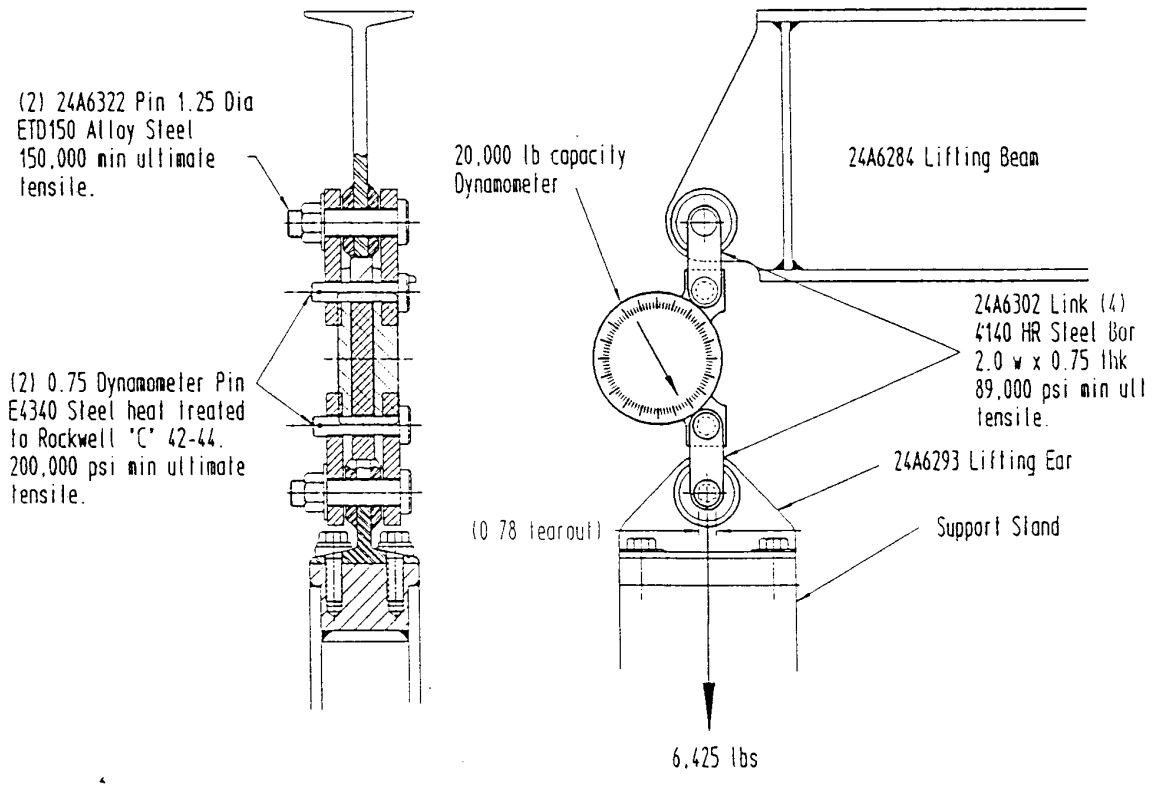

4.2.1.1 Tensile Stress in link at 1.25 dia pin. (maximum stress)

$$S_{TL} = \frac{P}{A} = \frac{6{,}425}{2[(2.0-1.26) \times 0.75)]} = \underline{5{,}800 \text{ psi}} \qquad S_{TL}$$

For 4140 HR steel S_{ult} = 89,000 psi
Safety factor = 89,000/5,800
SF = 15.3 (ok - greater than 5) SF_{TL}

4.2.1.2 Tearout Stress in link at 1.25 dia pin. (maximum stress)

$$S_{TOL} = \frac{P}{A} = \frac{6{,}425}{4(0.78 \times 0.75)} = \underline{2{,}750 \text{ psi}} \qquad S_{TOL}$$

Safety factor = 89,000/2,750
SF = 32.4 (ok - greater than 5) SF_{TOL}

4.2.1.3 Bearing Stress in link at 0.75 dia pin. (maximum stress)

$$S_{BL} = \frac{P}{A} = \frac{6{,}425}{2(0.75 \times 0.75)} = \underline{5{,}710 \text{ psi}} \qquad S_{BL}$$

Safety factor = 89,000/5,710
SF = 15.6 (ok - greater than 5) SF_{BL}

5.0 Lifting Ear (24A6293)

5.1 Design Considerations

Eight (8) Lifting Ears are required for the TPC Lifting Fixture assembly. Two (2) each are attatched to the longitudinal lifting beams and four (4) attatch to the corner posts of the TPC Test Stand. fig 1.
Possible failure modes include tensile stress in hold-down bolts, combined tensile and shear stress in hold-down bolts on the lift beam, tearout stress in ear from pin, bearing stress in ear from pin, and bending stress on the the ear from the vertical load component

5.2 Calculations

Assume that the load condition on the longitudinal lifting beam as shown in fig 5. (27,900 - 2,200)/2 lbs = 12,850 lbs. Assume that each ear takes 1/2 of this load. For this and all subsequent calculations a design value of 6,425 lbs will be used as the applied load for the vertical component, 5,074 lbs for the horizontal component, and 8,187 lbs for the diagonal component.

5.2.1 Stresses

Under maximum load conditions the lifting ears transfer the load of the TPC, TPC Test Stand, and Lift beam to the Spreader Beam via a 1 1/4" Jaw end Turnbuckle. (8,187 lbs)

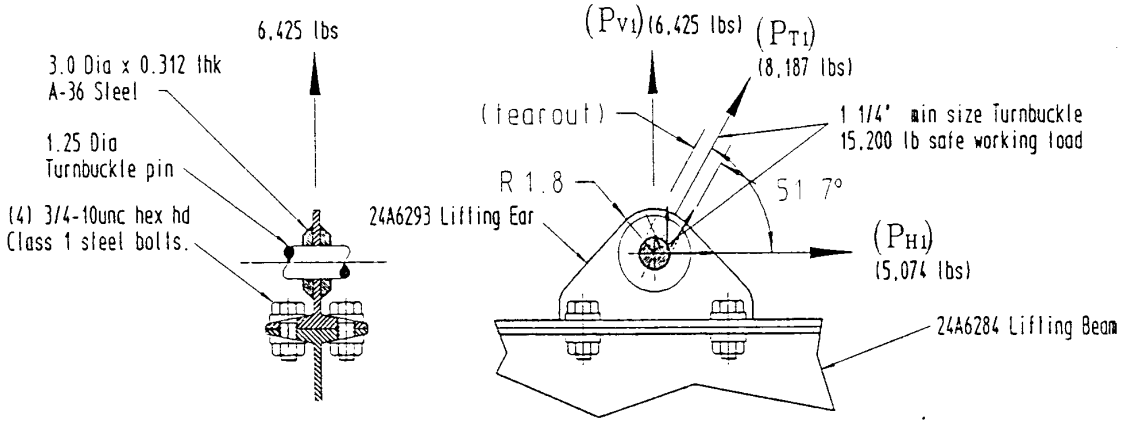

Figure 8 (24A6293) Lifting Beam Ear

5.2.1.1 Stress in Bolts

Tensile Stress from vertical component:

$$S_{TVB} = \frac{P}{A} = \frac{6,425}{4(.334)} = \underline{4,810 \text{ psi}} \qquad S_{TVB}$$

Shear Stress from horizontal component:

$$P \qquad 5,074$$

Combined Bending and Shear stress

To determine the Safety Factor the von Mises stress is used:

$$Y = \left[\frac{(\sigma_X - \sigma_Y)^2 + (\sigma_Y - \sigma_Z)^2 + (\sigma_Z - \sigma_X)^2}{2} + 3\,\tau_{XY}^2 + 3\,\tau_{YZ}^2 + 3\,\tau_{ZX}^2 \right]^{\frac{1}{2}}$$

where: $\sigma_X = 0$ $\tau_{XY} = 0$

$\sigma_Y = 0$ $\tau_{YZ} = 3{,}800$ psi

$\sigma_Z = 4{,}810$ psi $\tau_{ZX} = 0$

$$= \underline{8{,}152 \text{ psi}} \qquad Y$$

Safety factor = 58,000/8,152

SF = 7.11 (ok - greater than 5) SF_{TL}

5.2.1.2 Tearout Stress in Ear at pin (neglect washers)

$$S_{TOE} = \frac{P}{A}$$

$$A_{WEB} = 2(0.35 \times 1.8) = 1.26 \text{ in}^2$$

$$S_{TOE} = \frac{8{,}187}{1.26} = \underline{6{,}500 \text{ psi}} \qquad S_{TOE}$$

Safety factor = 58,000/5,010

SF = 11.6 (ok - greater than 5) SF_{TOE}

5.2.1.3 Bearing Stress in Ear from pin (include washers)

$$S_{BE} = \frac{P}{A} = \frac{8{,}187}{1.25 \times 0.35 + 2(0.312 \times 1.25)} = \underline{6{,}725 \text{ psi}} \qquad S_{BE}$$

Safety factor = 58,000/6,725

SF = 8.62 (ok - greater than 5) SF_{BE}

5.2.1.4 Bending stress in Ear

Assume that the ear is loaded between the hold down bolts as a simple beam with a concentrated load of 6,425 lbs acting at the center. fig 9

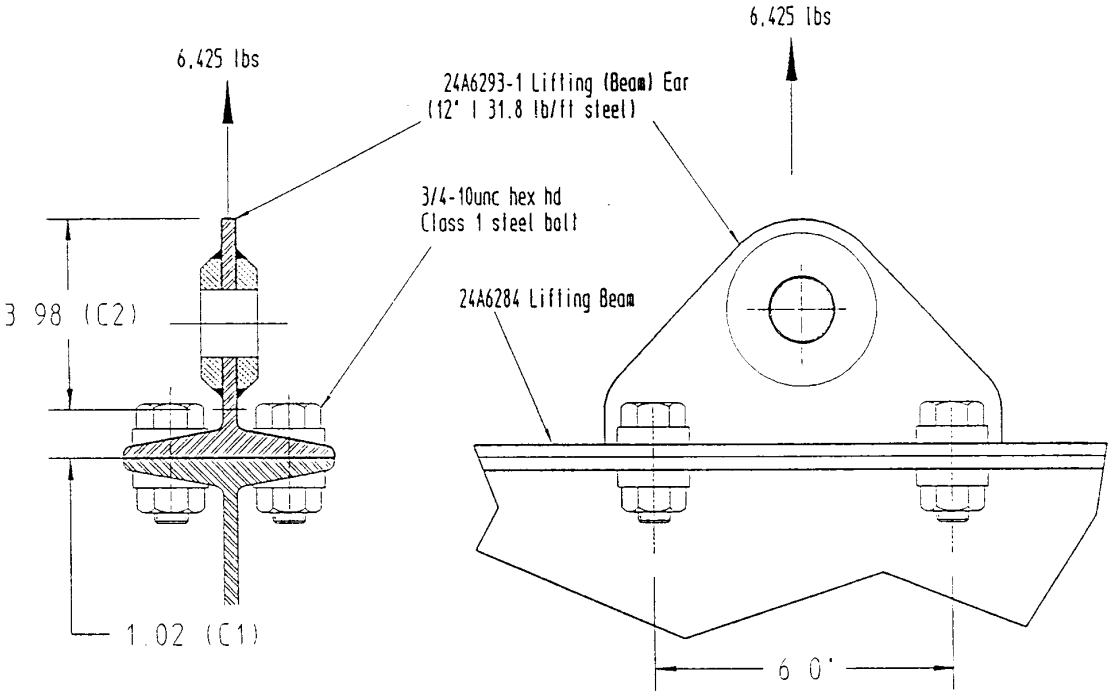

Figure 9 Bending stress in Ear

Neglecting washers the moment of inertia at the ear center is:

From ME10: $I_E = \underline{6.66\ in^4}$ I_E

$c_1 = \underline{1.02\ in}$

$c_2 = \underline{3.98\ in}$

$$f_{EMAX} = \frac{M c_2}{I} = \frac{(6{,}425 \times 6/4) \times 3.98}{6.66} = \underline{5{,}760\ psi} \quad f_{EMAX}$$

For A36 steel S_{ult} = 58000.

Safety factor = 58000/5,760

6.0 Lifting Beam Link Pin (24A6322)

6.1 Design Considerations

Lifting Beam Link Pins (24A6322) connect the Links to the Test Stand,(fig 10) and Lifting Beam. (fig 10) Dynamometers are supplied with pins that are 0.75 dia E4340 steel heat treated to Rockwell C 42-44 (200,000 ultimate tensile strength and rated for a vertical load of 20,000 lbs.
Link Pins (24A6322) are ETD150 alloy steel (150,000 psi min ultimate tensile strength). Failure modes for the 1.25 dia pins include shear, bending, and the combined shear and bending stress.

6.2 Calculations

For this and all subsequent calculations a design value of 6,425 lbs will be used as the applied load.

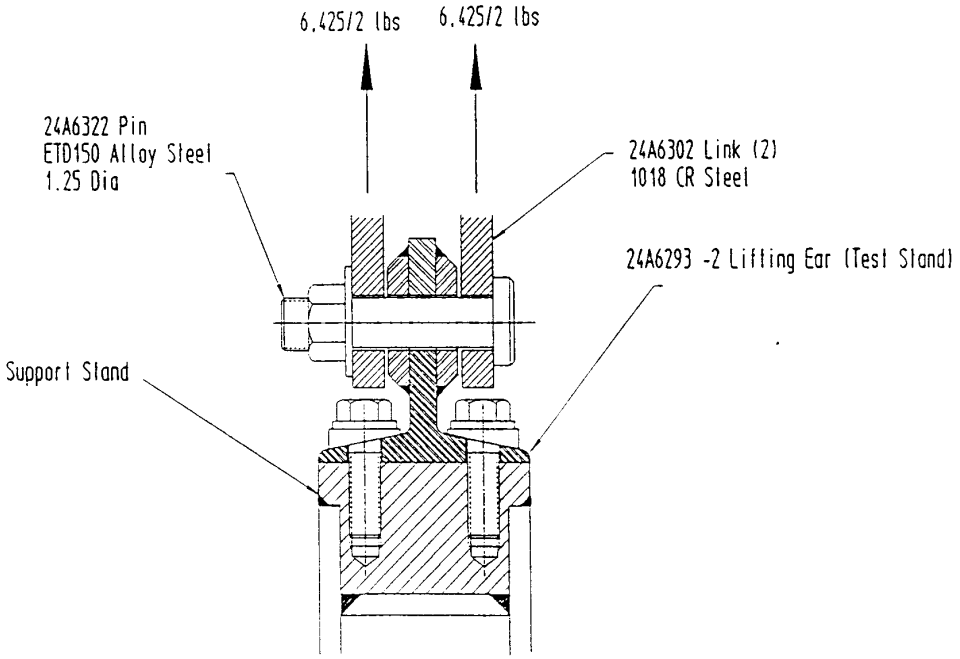

Safety Note File Number SN 95-003

6.2.1 Stresses

Under maximum load conditions the pins are loaded by the Links with a vertical load of 6,425/2 lbs per link. Assume that this load acts on the center of each link. Assume that in addition to the shear load, that the pin acts as a simple beam with (2) concentrated loads of 6,425/2 lbs symmetrically placed at the points where the pin makes contact at the outside corner of the ear. (fig 11)

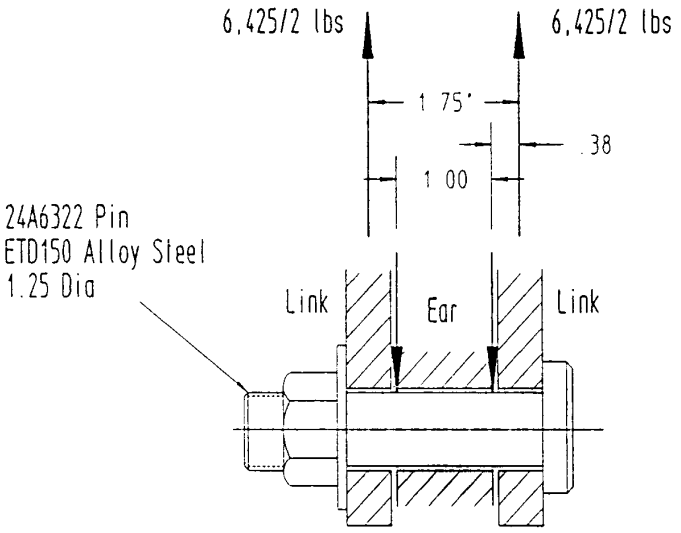

Figure 11 Pin Loading

6.2.1.1 Pin Shear Stress

$$A_P = \frac{\pi D^2}{4} = \frac{\pi}{4} \times \overline{1.25}^2 = \underline{1.227}\ in^2 \qquad A_P$$

$$S_P = \frac{P}{A} = \frac{6,425}{(2) \times 1.227} = \underline{2,620}\ psi \qquad S_p$$

6.2.1.2 Pin Bending Stress

$$I_P = \frac{\pi D^4}{64} = \frac{\pi}{64}\ \overline{1.25}^4 = \underline{0.120}\ in^4 \qquad I_P$$

$$M_{PMAX} = Pa = 6,425/2 \times 0.38 = \underline{1,221}\ lb\text{-}in \qquad M_{PMAX}$$

$$f \qquad Mc \qquad 1,221 \times 0.625 \qquad 6,360\ psi \qquad f$$

6.2.1.3 Combined Bending and Shear stress

To determine the Safety Factor the von Mises stress is used:

$$Y = \left[\frac{(\sigma_X - \sigma_Y)^2 + (\sigma_Y - \sigma_Z)^2 + (\sigma_Z - \sigma_X)^2}{2} + 3\,\tau_{XY}^2 + 3\,\tau_{YZ}^2 + 3\,\tau_{ZX}^2 \right]^{\frac{1}{2}}$$

where: $\sigma_X = 0$ $\tau_{XY} = 0$

$\sigma_Y = 0$ $\tau_{YZ} = 2{,}620$ psi

$\sigma_Z = 6{,}360$ psi $\tau_{ZX} = 0$

$= 6{,}420$ psi Y

ETD150 steel S_{ult} = 150,000 psi
Safety factor = 150,000/6,420
SF = 23.3 (ok - greater than 5) SF_Y

LAWRENCE BERKELEY LABORATORY - UNIVERSITY OF CALIFORNIA **ENGINEERING NOTE**	CODE SR0209	SERIAL M7548	STAR doc# ST 0269	PAGE 19 OF 27
AUTHOR Bob Caylor	DEPARTMENT ENGR/NSD – STAR	DATE June 20, 1995	STAR WBS# 4.2.9	

Safety Note File Number 95-003

REQ	ITEM	PART NUMBER	DESCRIPTION
1	1	24A6273	SPREADER BEAM
2	2	24A6284	LIFTING BEAM
4	3	24A6294-1	LIFTING BEAM EAR (TEST STAND)
4	4	24A6294-2	LIFTING BEAM EAR (LIFT BEAM)
16	5	24A6302	LIFTING BEAM LINK
8	6	24A6322	LIFTING BEAM LINK PIN

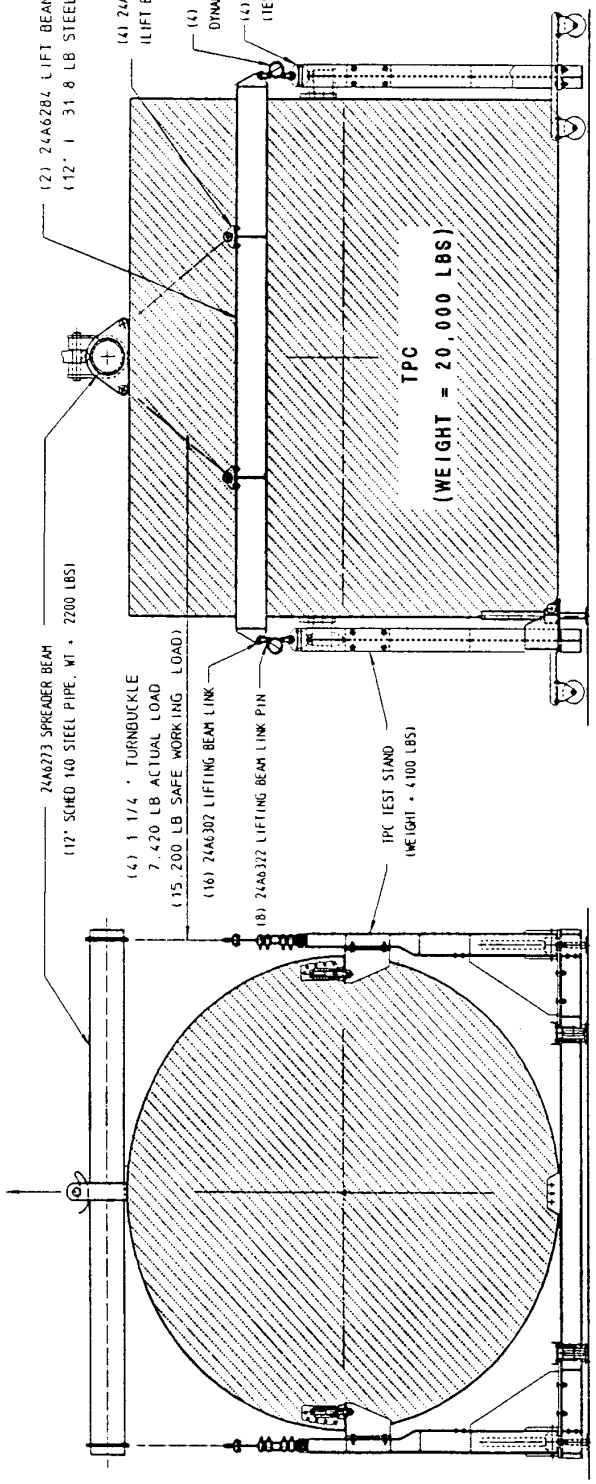

ELEVATION VIEW

NOTE:
LOAD TEST PER EN NOTE M7548

END VIEW

LAWRENCE BERKELEY LABORATORY
UNIVERSITY OF CALIFORNIA-BERKELEY
RHIC - STAR - TPC
TRANSPORT FIXTURES/SHIPPING
IPC LIFTING FIXTURE
ASSEMBLY
SR0209 24A6314

REQ	ITEM	PART NUMBER	DESCRIPTION
1	1		PIPE, 12 IPS SCHED 140 (12.75 OD X 1.12 WALL) A-106 STEEL
1	2		BAR, COLD FINISHED ALLOY STEEL ETD150 X 3.0 DIA
			150,000 PSI ULTIMATE TENSILE STRENGTH - CERTIFIED
2	3		PLATE, ASTM A-36 X 4.0 THK
2	4		PLATE, ASTM A-36 X 1.0 THK
1	5		PLATE, ASTM A-36 X 1.0 THK
8	6		PLATE, ASTM A-36 X 0.25 THK

NOTES

1. LOAD TEST PER EN NOTE M7548
2. FOR USE WITH LIFTING BEAM 24A6284 AND EARS 24A6293.
3. ESTIMATED WEIGHT = 2200 LBS

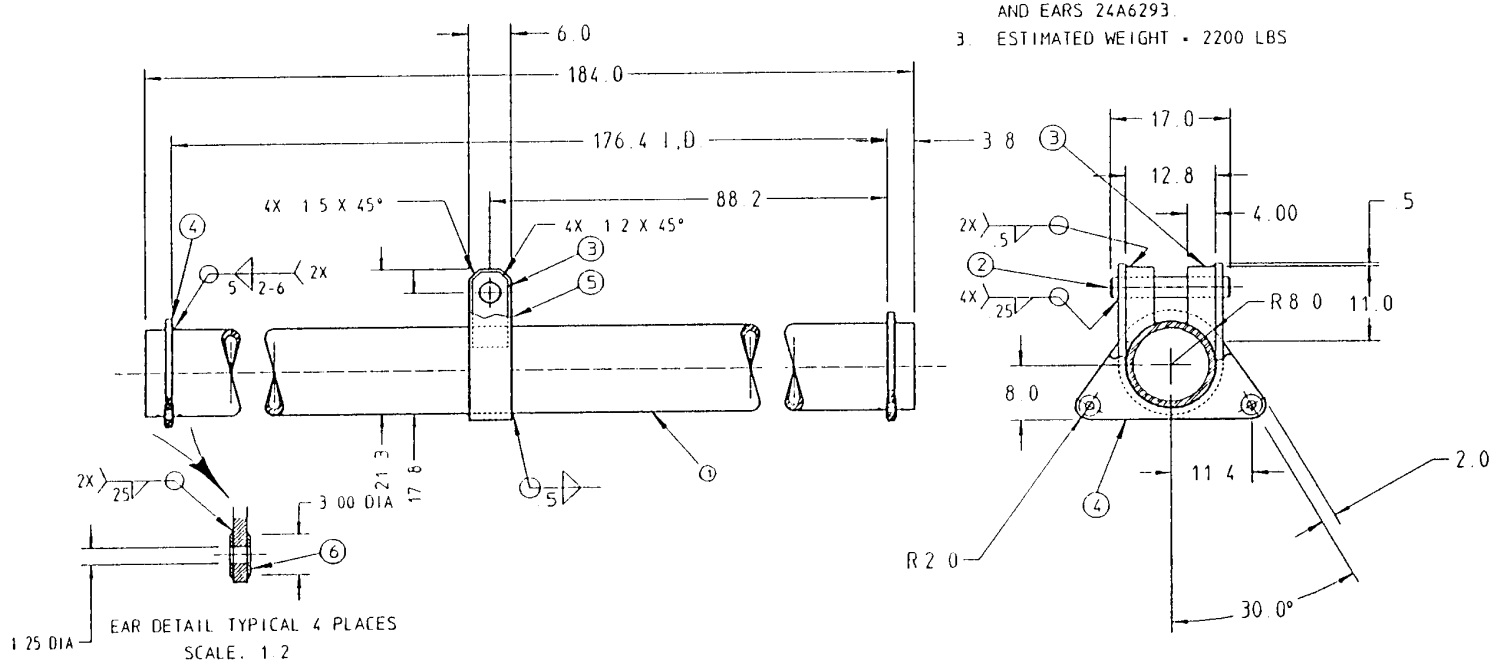

Safety Note File Number 95-003

REV	DWG	CHK	ZONE	DATE	CHANGES

UNLESS OTHERWISE SPECIFIED

TOLERANCES: X ± 1 | FRAC ± | XX ± .02 | ANGLES ± 1° | XXX ± | FINISH 125

THREADS ARE CLASS 2
CHAMFER ENDS OF ALL SCREW THREADS 30°
CUT 1.5 PITCH THRD RELIEF WITH ROUND NOSE TOOL ON MACHINE CUT THREADS
BREAK EDGES .016 MAX. ON MACHINED WORK
REMOVE BURRS WELD SPLATTER & LOOSE SCALE
REFERENCES: ANSI Y14.5 & B46.1

SHOP ORDERS

ACCT NO | SERIAL NO
DATE ISSD | DATE REQD | NO REQD
DELIVER TO
SURFACE TREATMENT: UNTREATED
IDENT METH: STENCIL
DWG BY: R. CAYLOR — DATE 06-01-95
CHK BY: J. BERCOVITZ — DATE 06-01-95

LAWRENCE BERKELEY LABORATORY
UNIVERSITY OF CALIFORNIA-BERKELEY
RHIC - STAR - TPC
TRANSPORT FIXTURES/SHIPPING
LIFTING SPREADER BEAM

PATENT CLEAR	DWG. TYPE	SHOWN ON	SCALE 1:10	DO NOT SCALE PRINTS
	C-DET	24A6314	DWG. NO. 24A6273	SIZE / REV.
MICROFILMED	DESIGN ACCT. NO	CATEGORY CODE SR0209		

AUTHOR: Bob Caylor

DEPARTMENT: ENGR/NSD - STAR

LAWRENCE BERKELEY LABORATORY - UNIVERSITY OF CALIFORNIA

ENGINEERING NOTE

CODE	SERIAL	STAR doc#	PAGE
SR0209	M7548	ST 0269	2 OF 27

DATE: June 20, 1995

STAR WBS# 4.2.9

LAWRENCE BERKELEY LABORATORY - UNIVERSITY OF CALIFORNIA	CODE	SERIAL	STAR doc#	PAGE
ENGINEERING NOTE	SR0209	M7548	ST0269	21OF27

AUTHOR	DEPARTMENT	DATE	STAR WBS#
Bob Caylor	ENGR/NSD - STAR	June 20, 1995	4.2.9

Safety Note File Number 95-003

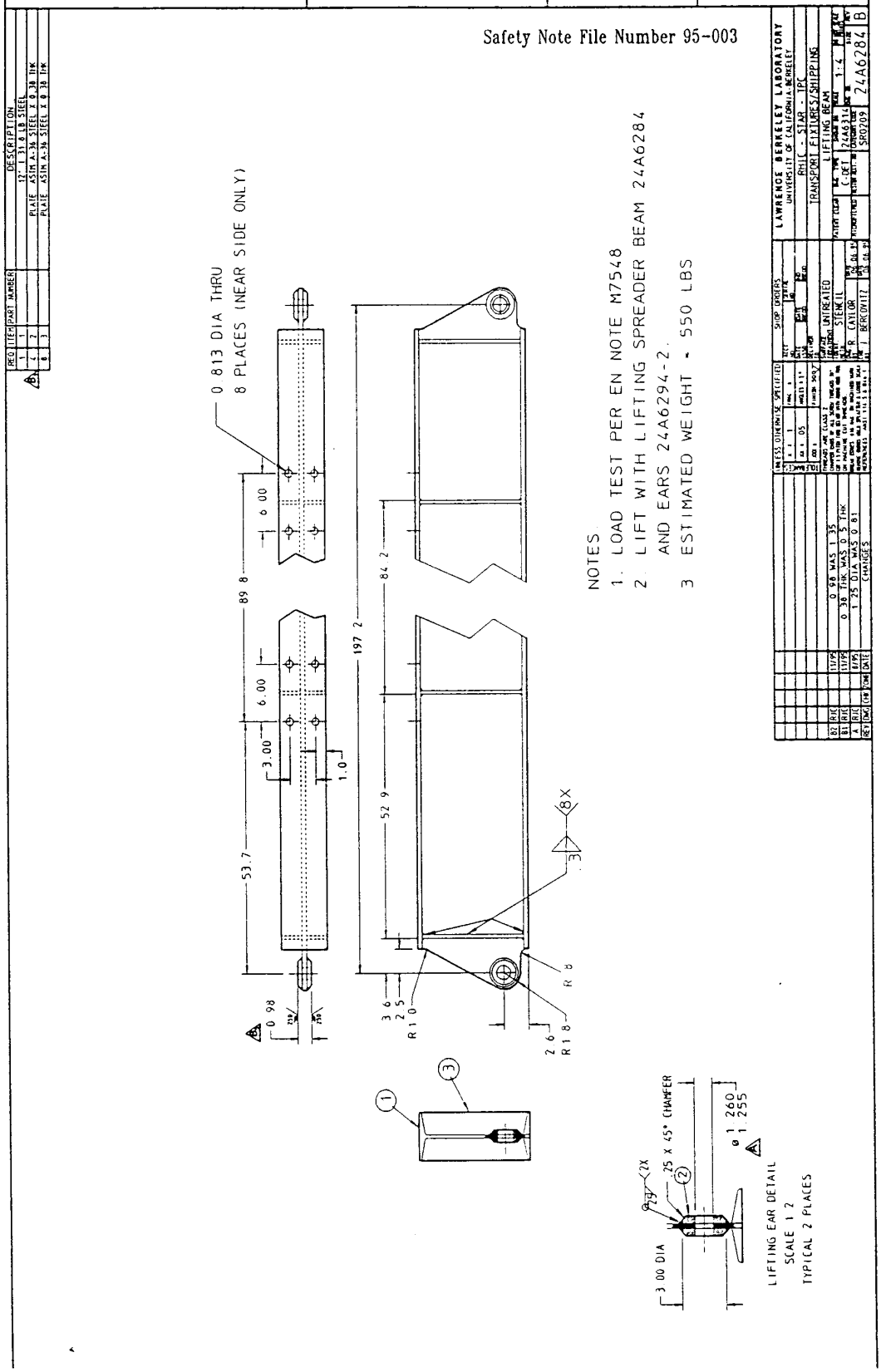

NOTES

1. LOAD TEST PER EN NOTE M7548
2. LIFT WITH LIFTING SPREADER BEAM 24A6284 AND EARS 24A6294-2.
3. ESTIMATED WEIGHT - 550 LBS

ITEM	PART NUMBER	DESCRIPTION
1		12" I 31 0 LB STEEL
2		PLATE ASTM A-36 STEEL 2 0.38 THK
3		PLATE ASTM A-36 STEEL 2 0.38 THK

LAWRENCE BERKELEY LABORATORY
UNIVERSITY OF CALIFORNIA, BERKELEY
RHIC - STAR - TPC
TRANSPORT FIXTURES/SHIPPING
LIFTING BEAM
24A6284 B

LAWRENCE BERKELEY LABORATORY - UNIVERSITY OF CALIFORNIA **ENGINEERING NOTE**	CODE SR0209	SERIAL M7548	STAR doc# ST0269	PAGE 22OF27
AUTHOR Bob Caylor	DEPARTMENT ENGR/NSD - STAR	DATE June 20, 1995	STAR WBS# 4.2.9	

Safety Note File Number 95-003

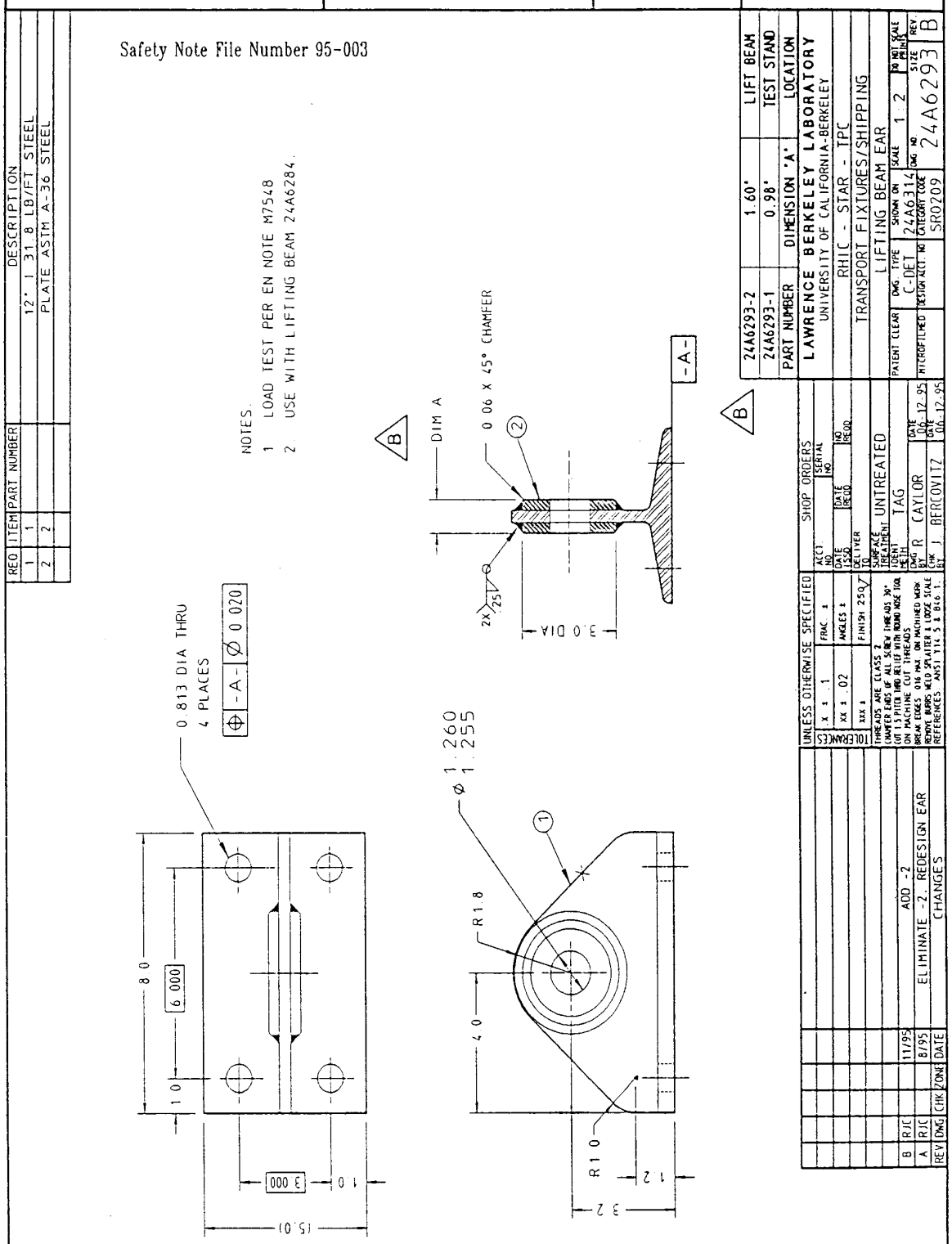

24A6302A	REQD	ITEM	PART NUMBER	DESCRIPTION
				BAR, 4140 H.R. STEEL ANNEALED X 0.75 X 2.0
				89,000 PSI MIN ULTIMATE TENSILE STRENGTH, CERTIFIED

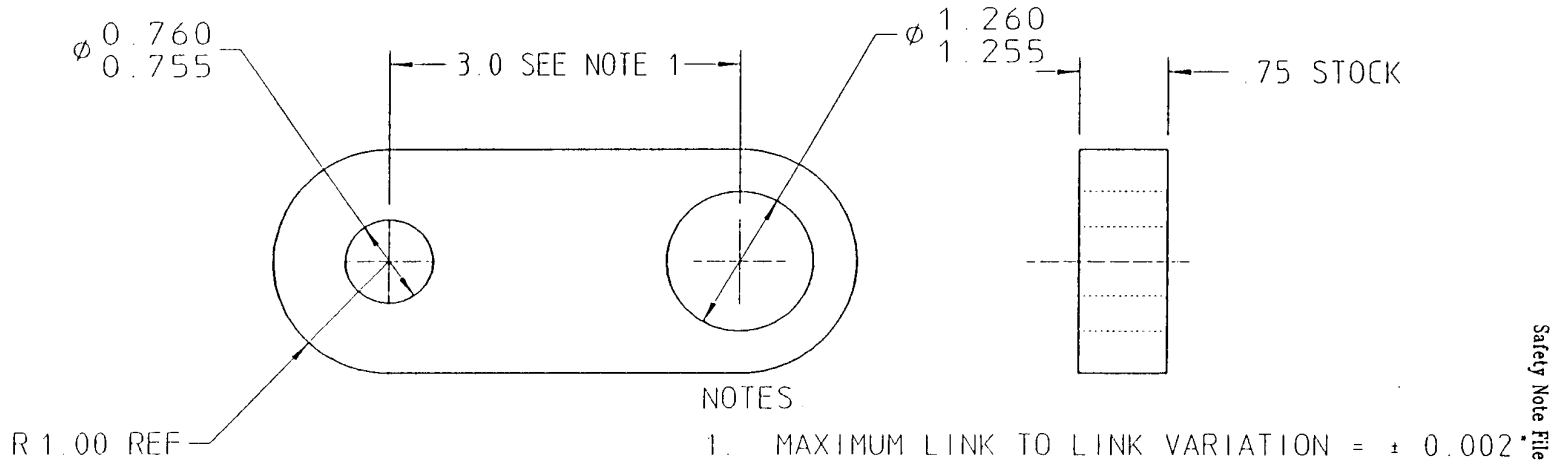

NOTES

1. MAXIMUM LINK TO LINK VARIATION = ± 0.002
2. LOAD TEST PER EN NOTE M7548.
3. USE WITH LIFTING BEAM 24A6284 AND LIFTING EAR 24A6294.

Safety Note File Number 95-003

REV	DWN	CHK	DATE	DESCRIPTION
A	RJC		8/95	REDESIGN LINK

UNLESS OTHERWISE SPECIFIED
TOLERANCE .X ± .XX ± .03 .XXX ± .010
SURFACE FINISH 250 √

1. SAWED, FLAMECUT, SHEARED OR CUT STOCK FINISH
2. THREADS CLASS 2
3. CHAMFER ENDS OF ALL SCREW THDS 30°
4. 1 1/2 PITCH RELIEF WITH ROUND NOSE TOOL ON ALL MACHINE CUT THDS.
5. BREAK EDGES 1/64 MAX. ON MACHINE WORK
6. REMOVE BURRS, LOOSE SCALE AND WELD SPLATTER
7. REF -USASI OR ASA STDS SECT Y-14 & B46-1

SHOP ORDERS

ACCT NO		SER NO	
DATE ISSD	DATE REQD	NO REQD	
DELIVER TO			
SURFACE TREATMENT	UNTREATED		
IDENTIFIC METHOD	STAMP		
DWG BY	R. CAYLOR	DATE	06-15-95
CHK BY	J. BERCOVITZ	DATE	06-15-95

LAWRENCE BERKELEY LABORATORY
UNIVERSITY OF CALIFORNIA-BERKELEY
RHIC - STAR - TPC
TRANSPORT FIXTURES/SHIPPING
LIFTING BEAM LINK

PAT CLEAR	DWG TYPE	SHOWN ON	SCALE: 2 X SIZE
	C-DET	24A6314	DO NOT SCALE PRINTS
MICROFILMED	DESIGN ACCT NO	CATEGORY CODE	DWG NO REV
		SR0209	24A6302A

AUTHOR: Bob Caylor
DEPARTMENT: ENGR/NSD - STAR
DATE: June 20, 1995

LAWRENCE BERKELEY LABORATORY - UNIVERSITY OF CALIFORNIA
ENGINEERING NOTE

CODE: SR0209
SERIAL: M7548
STAR WBS#: 4.2.9
STAR doc#: ST 02621
PAGE: 23OF27

24A6322A	REQD	ITEM	PART NUMBER	DESCRIPTION
				BAR, COLD FINISHED ALLOY STEEL ETD150 X 2.00 DIA
				150,000 PSI MIN ULTIMATE TENSILE STRENGTH - CERTIFIED

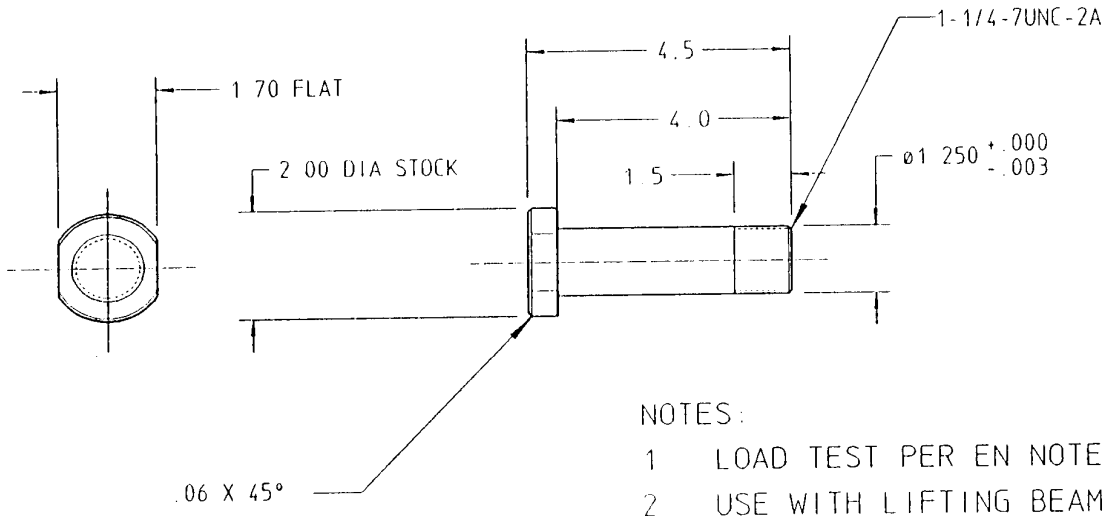

NOTES:

1 LOAD TEST PER EN NOTE M7548.

2 USE WITH LIFTING BEAM 24A6284, EAR 24A6294, and LINK 24A6322.

Safety Note File Number 95-003

AUTHOR	DEPARTMENT	DATE	STAR WBS#
Bob Caylor	ENGR/NSD - STAR	June 20, 1995	4.2.9

LAWRENCE BERKELEY LABORATORY - UNIVERSITY OF CALIFORNIA

ENGINEERING NOTE

CODE	SERIAL	STAR doc#	PAGE
SR0209	M7548	ST 0269	24OF27

REV	DWN	CHK	DATE	DESCRIPTION
A	RJC		8/95	REDESIGN PIN

UNLESS OTHERWISE SPECIFIED

TOLERANCE .X ± 05 .XX ± .03 .XXX ±

SURFACE FINISH 250 √

1. SAWED, FLAMECUT, SHEARED OR CUT STOCK FINISH
2. THREADS CLASS 2
3. CHAMFER ENDS OF ALL SCREW THRDS 30°
4. 1 1/2 PITCH RELIEF WITH ROUND NOSE TOOL ON ALL MACHINE CUT THRDS
5. BREAK EDGES 1/64 MAX. ON MACHINE WORK
6. REMOVE BURRS, LOOSE SCALE AND WELD SPLATTER
7. REF -USASI OR ASA S10S SECT Y-14 & B46-1

SHOP ORDERS

ACCT NO	SER NO
DATE ISSD	DATE REQD
DELIVER TO	
SURFACE TREATMENT	UNTREATED
IDENTIFIC METHOD	STAMP HEAD
DWG BY	R. CAYLOR — DATE 06-15-95
CHK BY	J. BERCOVITZ — DATE 06-15-95

LAWRENCE BERKELEY LABORATORY
UNIVERSITY OF CALIFORNIA-BERKELEY

RHIC - STAR - TPC

TRANSPORT FIXTURES/SHIPPING

LIFTING BEAM LINK PIN

PAT CLEAR	DWG TYPE	SHOWN ON	SCALE: FULL
	C-DET	24A6314	DO NOT SCALE PRINTS
MICROFILMED	DESIGN ACCT NO	CATEGORY CODE	DWG NO REV
		SR0209	24A6322A

Safety Note File Number SN 95-003

7.0 Proof Test

The total weight of the TPC and Support Stand is 24,100 lbs.
The minimum required test load is 48,200 lbs.

Fixtures 24A6273 (1),24A6284 (2), 24A6293 (8), 24A6302 (16) 24A6322 (8), Turnbuckles, Dynamometers, and all associated bolts were proof loaded by subjecting the assembled fixture to a load of 50,000 lbs in the following configuration.

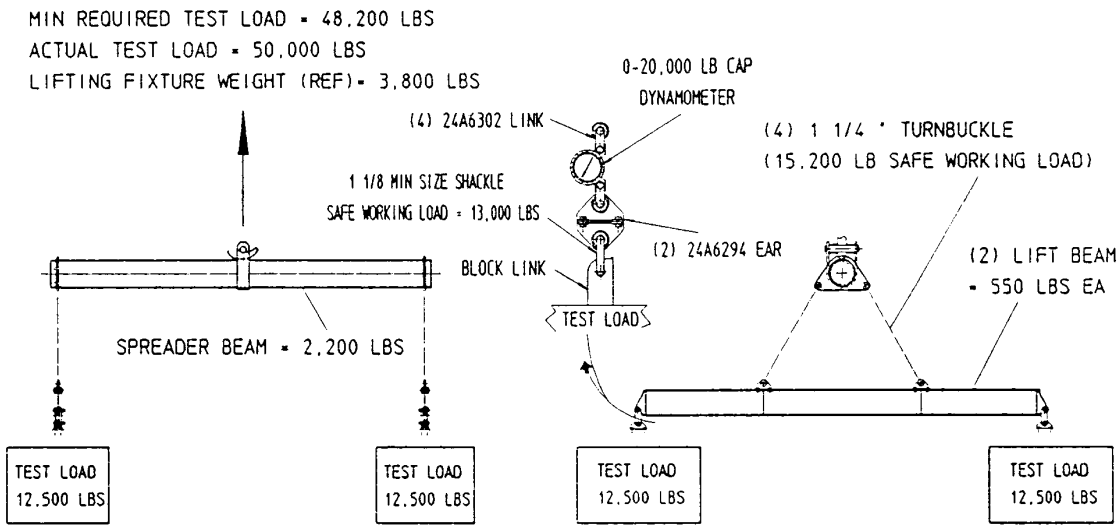

TPC LIFTING FIXTURE TEST LOAD

Test performed by Oliver S. Wiggins Date 12/15/95

Witnessed by Robert J. Caylor Date 12-15-95

Witnessed by [signature] Date 12-15-95

Safety Note File Number SN 95-003

8.0 Crack Inspection

Magnetic partical inspection was performed on fixtures 24A6273 (1), 24A6284 (2) 24A6293 (8),and 24A6302 (8) (19 parts) and all associated bolts by WPH Crain services.
The Certificate of Inspection is included at the end of this note.

Safety Note File Number SN 95-003

9.0 Material Certifications

27b: 24A6273.....Item 1.
27c: 24A6273.....Item 1.
27d: 24A6273.....Item 1.
27e: 24A6273.....Item 2.
27f: 24A6273.....Item 2.
27e: 24A6273.....Item 2.
27h: 24A6302A
27i: 24A6302A
27j: 24A6302A
27k: 24A6322A
27l: 24A6322A
27m: 24A6322A
27n: 24A6284A.....Item 1.
27o: 24A6284A.....Item 1.

10.0 Magnetic Particle Inspection Report

U.C. - L.B.L
#1 Cyclotron Rd. Bldg. 79
Berkeley CA 94701
Sab # 33459

276 - 2446273 ITEM (1)

R.J. GALLAGHER COMPANY
4708 NEW HORIZON BLVD
BAKERSFIELD, CA 93313
PHONE (805) 837-8031
FAX (805) 837-0535

検査証明書
INSPECTION CERTIFICATE

住友金属工業株式会社 和歌山製鉄所
〒640 和歌山市湊1850番地
SUMITOMO METAL INDUSTRIES, LTD.
WAKAYAMA STEEL WORKS
1850 Minato, Wakayama, Japan

89859

注文番号 Customer No.: 7Y016591 頁 Page: 1 日付 Date: 1994-5-27
注文者 092 KPC P2776U02 4P131718110
Shipper: MITSUBISHI CORPORATION
需要家 Customer:
品名 Commodity: SEAMLESS HOT FINISHED CARBON STEEL PIPE
WITH BEVELED ENDS
規格 Standard: API 5L GR.B ASTM A106-91 / ASME SA-106 GR.B ASTM A33 / ASME SA-[illegible]
Order No.: P/O NO. R9859
仕様書 Specification:

材質番号 Work No.	外径 O.D. M1	肉厚 W.T. M1	長さ Length M1	本数 No. of pcs.	総長 Total Length M1	重量 Mass M1
YYY×1327	12-3/4"	[illegible]"	32'			36,087

化学成分 Chemical Composition

溶鋼番号 Heat No.		C	Si	Mn	P	S	Cu	Ni	Cr	Mo	V	Ti
		2	2	2	3	3	2	2	2	2	2	2
		1=×10, 2=×100, 3=×1000, 4=×10000, 5=×100000										
	MIN	-	10	29	-	-	-	-	-	-	-	-
	MAX	27	-	106	25	25	40	40	40	15	8	100
	MIN	-	10	29	-	-	-	-	-	-	-	-
	MAX	30	-	106	25	25	40	40	40	15	8	100
J4341321		20	21	73	17	13	2	2	6	1	0	11
	P	21	19	73	17	13	1	3	6	1	0	11
	R	21	19	73	17	13	1	3	6	1	0	11

試験番号 Lot or Test No.	引張試験 Tensile Test					硬さ Hardness	衝撃試験 Impact Test				
		0.5	T.S.	EL %	RA %				(1)	(2)	(3)	AVG.
	MIN		350	400	25							
	MAX											
0001	P		497	718	374							

外観・寸法 Final & Dimension	水圧 Hydrostatic	非破壊検査 N.D.E.	へん平 Flattening	曲げ Bending	押しつぶし Flange (Crush Expanding)	つば出し Flange	溶接部試験 Weld Ductility	偏圧 Crush	偏溶 Reverse Flattening	リバーベンド Reverse Bend	リング拡大 Ring Expansion	リング引張 Ring Tensile	リングゲージ Ring Gauge	ドリフト Drift	メッキ Plated	塗装肉 Coating & Lining
GOOD	GOOD	-	GOOD	-	-	-	-	-	-	-	-	-	-	-	-	-

U4=CU+NI+CR+MO+V

HEAT TREATMENT / AS ROLLED

上記は文面は規定の規格および仕様に従って製造され、その要求事項を満足していることを証明します。
WE HEREBY CERTIFY THAT THE MATERIAL HEREIN DESCRIBED HAS BEEN MANUFACTURED, SAMPLED, TESTED, AND INSPECTED IN ACCORDANCE WITH ABOVE STANDARD AND SPECIFICATION AND SATISFIES THE REQUIREMENTS.

K. Kuno
技術管理部 品質保証[illegible]
MANAGER OF QUALITY SYSTEM
QUALITY CONTROL DEPARTMENT

OUR ITEM No. 3239265B 5245 55LB-1068-53B 7Y016591 E 0105

An ISO 9001 Certified Company

the Crosby® group, inc.

GENERAL OFFICES
2801 DAWSON ROAD (74110-5040)
P.O. BOX 3128
TULSA, OKLAHOMA 74101-3128

TELEPHONE 918-834-4611 TELEX 262569 CRSBY UR
CROSBY FAX NO. 918-832-0940

September 6, 1995

Carpenter Rigging Company
Attn: Wayne
222 Napoleon Street
San Francisco, CA 94124-1017

Dear Wayne,

This is to certify that the below listed Crosby products are in conformance with the specifications and provisions set forth in the Crosby Group literature at the time of their manufacture.

QTY	STOCK NO.	DESCRIPTION
4	1032910	HG228 1-1/4X24 J&J TRNBKL

Sincerely,

Nikki Stovall

Nikki Stovall
Customer Service Representative

cc: Customer Service File

products of uncompromising quality... Crosby Clips & Fittings
Lebus Load Binders
McKissick Blocks & Sheaves
Crosby-Western Blocks
National Swaging Products

Crosby® Jaw & Jaw Turnbuckle

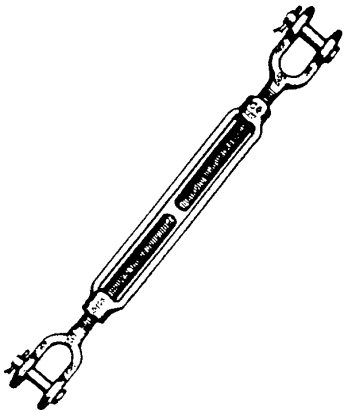

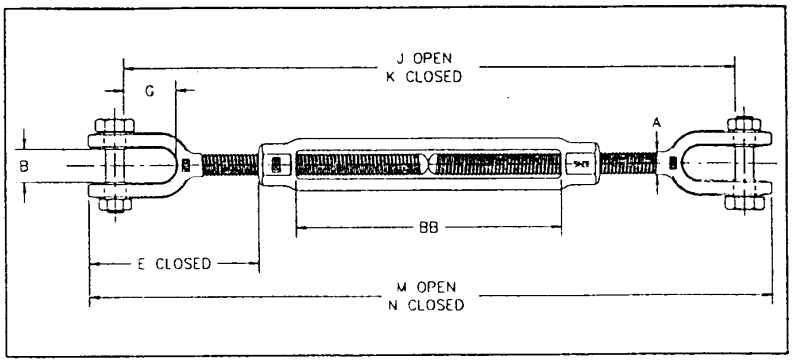

HG-228
JAW & JAW

Meets the requirements of Federal Specifications FF-T-791b, Type 1, Form 1 — CLASS 7

- Hot Dip galvanized steel.
- End fittings are Quenched and Tempered, bodies heat treated by normalizing.
- TURNBUCKLES RECOMMENDED FOR STRAIGHT OR IN-LINE PULL ONLY.
- Forged jaw ends are fitted with bolts and nuts for ¼" through ⅜", and pins and cotters on ¾" through 2¾" sizes.
- Modified UNJ thread for improved fatigue properties.
- Lock Nuts available for all sizes (see page 114).
- Comprehensive end fitting data provided on page 112.

Thread Diameter & Taper Size (In.)	Block No. Galv.	Working Load Limit* (lbs.)	Weight Each (lbs.)	Dimensions (In.) A	B	E Closed	G	J Open	K Closed	M Open	N Closed	BB
¼ x 4	1032493	500	.36	.25	.41	1.58	.62	10.90	6.90	11.90	7.90	4.00
5/16 x 4½	1032518	800	.52	.31	.47	1.98	.87	12.36	8.36	13.90	9.40	4.50
⅜ x 6	1032536	1200	.81	.38	.50	2.12	.87	16.14	10.14	17.38	11.38	6.00
½ x 6	1032554	2200	1.50	.50	.63	2.75	1.06	17.50	11.50	19.00	13.00	6.00
½ x 9	1032572	2200	1.74	.50	.63	2.75	1.06	23.50	14.50	25.00	16.00	9.00
½ x 12	1032590	2200	2.40	.50	.63	2.75	1.06	29.50	17.50	31.00	19.00	12.00
⅝ x 6	1032616	3500	2.72	.63	.75	3.50	1.31	18.80	12.80	20.88	14.88	6.00
⅝ x 9	1032634	3500	3.24	.63	.75	3.50	1.31	24.80	15.80	26.88	17.88	9.00
⅝ x 12	1032652	3500	3.74	.63	.75	3.50	1.31	30.80	18.80	32.88	20.88	12.00
¾ x 6	1032670	5200	4.11	.75	.94	4.18	1.50	20.00	14.00	22.60	16.60	6.00
¾ x 9	1032698	5200	5.10	.75	.94	4.18	1.50	26.00	17.00	28.60	19.60	9.00
¾ x 12	1032714	5200	5.65	.75	.94	4.18	1.50	32.00	20.00	34.60	22.60	12.00
¾ x 18	1032732	5200	7.00	.75	.94	4.18	1.50	44.00	26.00	46.60	28.60	18.00
⅞ x 12	1032750	7200	8.17	.88	1.13	4.85	1.75	33.36	21.36	36.32	24.32	12.00
⅞ x 18	1032778	7200	9.96	.88	1.13	4.85	1.75	45.36	27.36	48.32	30.32	18.00
1 x 6	1032796	10000	8.50	1.00	1.19	5.53	2.06	22.72	16.72	26.06	20.06	6.00
1 x 12	1032812	10000	12.00	1.00	1.19	5.53	2.06	34.72	22.72	38.06	26.06	12.00
1 x 18	1032830	10000	14.00	1.00	1.19	5.53	2.06	46.72	28.72	50.06	32.06	18.00
1 x 24	1032858	10000	17.00	1.00	1.19	5.53	2.06	58.72	34.72	62.06	38.06	24.00
1¼ x 12	1032876	15200	21.50	1.25	1.75	7.21	2.81	37.34	25.34	41.54	29.54	12.00
1¼ x 18	1032894	15200	24.25	1.25	1.75	7.21	2.81	49.34	31.34	53.54	35.54	18.00
1¼ x 24	1032910	15200	28.00	1.25	1.75	7.21	2.81	61.34	37.34	65.54	41.54	24.00
1½ x 12	1032938	21400	30.50	1.50	2.06	7.88	2.81	38.50	26.50	43.50	31.50	12.00
1½ x 18	1032956	21400	36.75	1.50	2.06	7.88	2.81	50.50	32.50	55.50	37.50	18.00
1½ x 24	1032974	21400	40.67	1.50	2.06	7.88	2.81	62.50	38.50	67.50	43.50	24.00
1¾ x 18	1033018	28000	55.04	1.75	2.38	9.40	3.38	53.38	35.38	59.18	41.18	18.00
1¾ x 24	1033036	28000	63.36	1.75	2.38	9.40	3.38	65.38	41.38	71.18	47.18	24.00
2 x 24	1033054	37000	94.25	2.00	2.50	11.86	3.69	69.54	45.54	76.72	52.72	24.00
2½ x 24	1033072	60000	165.00	2.50	2.88	13.56	4.44	72.98	48.98	82.18	58.18	24.00
2¾ x 24	1033090	75000	198.00	2.75	3.50	15.22	4.19	74.75	50.75	85.50	61.50	24.00

* Proof Load 2 times Working Load Limit. Ultimate load is 5 times Working Load Limit.

27e - 24A6273 - ITEM (2)
-e

Ryerson No. 13 IP 699925
Territory 13
Load POOL
Item No. 01

JOSEPH T. RYERSON & SON, INC.

Material Certification

To: UNIVERSITY OF CALIFORNIA
UC BERKELEY LAB
P.O. BOX 528 ATTN A/P
BERKELEYE CA 94710

Your Order Number
6412271

Item Description
ALLOY CF ETD 150 3 RD x 2 FT 0

Single/Multiple Heat Number
8493877

Slab/Coil Number (if applicable)

Item Instructions
SEND CERTS WITH SHIPMENT
CERTIFIED

A survey of our material sources has indicated that neither mercury nor radioactive substances is introduced into their products, or is used in any of their processes. While we make no independent tests for mercury or radiation, there is nothing in Ryerson's system which could be expected to introduce contamination of either type.

This document certifies that the material described above was shipped on your order and that the attached data is a true copy of the test report furnished by the producer with said material.

September 12 1995

Authorized Agent of
Joseph T. Ryerson & Son, Inc.

27F

CERTIFICATE NO. 103372

LaSalle Steel Company

A SUBSIDIARY OF Quanex

La Salle Steel Company
1412 150th Street
Hammond, IN 46327-1799

NAME OF CARRIER	CAR NUMBER	CUSTOMER ORDER NO.	DATE SHIPPED
CPU	729903364[illegible]	1A15405	11/01/94 23:00

SOLD TO

J T RYERSON & SON INC
P O BOX 8000-P
CHICAGO, IL 60680

CONSIGNED TO AND DESTINATION

14TH & ROCKWELL WEST WHSE
BAY #3
CHICAGO IL 60608

ACCT. 56753 O. C. # 1079801 PRODUCT CODE 31609 PREPAID
SALES REP J. DAVIDS SALES SERVICE K. SKAGGS

MATERIAL DESCRIPTION

ORDER QTY	GRADE	SHAPE	SIZE	LENGTH-FROM/TO
20,174 LB	E.T.D. 150(R)	ROUND	3.000	10FT
				15FT
			76.20 MM	3048.00 MM
				3962.40 MM

ASTM A331-90, AMS 6378E

ITEM INSTRUCTIONS

CUSTOMER ITEM NUMBER: COMM CODE 836438
MARK/PAINT: BLACK AND GOLD WITH YELLOW DOT
REMARKS: SPEC 8384F SPEC M-100 SECTION 9 MAGNETIC TEST REQUIRED
JOMINY REQUIRED OTHER TESTS REQUIRED
REPORT GRAIN SIZE RESIDUALS QQS-624

HEAT	PRO OC	BUNDLE #	ITEM #	BNDL LNGTH	LOCATION	CALC FEET	CALC BARS	SHIPPED WEIGHT
8493877	37871	382715-8 A	10160-0	1106-1110	20-M-16	184	16	4,48[illegible]
8493877	37871	382716-7	10160-0	1106-1110	47-K-10	115	10	2,77[illegible]
8493877	37871	386397-6 A	10160-0	1106-1110	16-D-03	173	15	4,16[illegible]
8493877	37871	386398-5 A	10160-0	1106-1110	16-G-03	173	15	4,17[illegible]
8493877	37871	388194-7	10160-0	1106-1200	47-J-10	163	14	3,92[illegible]
					TOTALS	808FT	70PC	19,45[illegible]
						246 M		8,820kg

SHIPPED FROM HAMMOND, INDIANA, F.O.B. OUR PLANT * SHIPMENT COMPLETE *

HEAT	C	MN	P	S	SI	NI	CR	MO	CU	AL	V
8493877	.41	.92	.016	.031	.230	.15	1.02	.22	.170	.034	.007
	SE		TE		BI	AS		B	N		
	.030/.060										

~~5 19,450~~

TOTAL THIS SHIPMENT		
TARE	TOTAL BDL'S.	GROSS WEIGHT

I hereby certify that these goods were produced in compliance with all applicable requirements of sections 6, 7, and 12 of the Fair Labor Standards Act, as amended, and all regulations and orders of the United States Department of Labor issued under section 14 thereof.

Material was not exposed to mercury or any metal alloy that is liquid at ambient temperature during processing or while in our possession. No weld repairs performed on the above material.

D. M. KEANE, MGR.-Q.A.

CERTIFICATE OF TEST BY

CERTIFICATE COPY

NOV 03 '94 05:24PM RYERSON CHICAGO

27e

CERTIFICATE NO. 103372

LaSalle Steel Company

A SUBSIDIARY OF
Quanex

La Salle Steel Company
1412 150th Street
Hammond, IN 46327-1799

NAME OF CARRIER	CAR NUMBER	CUSTOMER ORDER NO.	DATE SHIPPED
CPU	7299083645	1A15405	11/01/94 23:00

SOLD TO

J T RYERSON & SON INC
P O BOX 6000-A
CHICAGO, IL 60680

CONSIGNED TO AND DESTINATION

16TH & ROCKWELL WEST WHSE
BAY #3
CHICAGO IL 60602

ACCT. 56753 O. C. * 1079801 PRODUCT CODE 31609 PREPAID
SALES REP J. JAVIOS SALES SERVICE K. SKAGGS

HEAT	PRO QC	T.S.	Y.S.	EL	R/A	BHN	PROOF
8493877	37871	156,100	156,000	8.8	30.5	311	
8493877	37871	159,900	154,900	10.3	40.0	321	

	H	A	R	D	E	N	A	B	I	L	I	T	Y	
HEAT	01	02	03	04	05	06	08	10	12	14	16	20	24	28	32
8493877	59	59	58	58	57	57	56	56	55	54	52	49	46	43	39

HEAT	GRAIN SIZE	SOURCE	CAST
8493877	FINE GRAIN #5-8	REPUBLIC STEEL (USA)	INGOT

HEAT 8493877 MACRO S1R1C2
DECARB .009/.010"

SHIPPING INSTRUCTIONS
TRUCK LOAD:TL UNLOADING:OVERHEAD RECEIVING HOURS FROM/TO: 08:30 15:30
RECEIVING DAYS: MON TUE WED THU FRI
WILL NOT RECEIVE FROM/TO: 09/23/92 THRU 09/25/92
OTHER SALES MUST SCHEDULE SHIPMENT OVERSHIPMENT NOT ALLOWED
NO PARTIAL(S) ALLOWED 6,000 UMX BUNDLE OTHER CERTIFICATION REQUIRED
CALL FOR SCHEDULED DELIVERY.

TOTAL THIS SHIPMENT		
TARE	TOTAL BDLS.	GROSS WEIGHT
		G 17,450

We hereby certify that these goods were produced in compliance with all applicable requirements of sections 6, 7, and 12 of the Fair Labor Standards Act, as amended, and all regulations and orders of the United States Department of Labor issued under section 14 thereof.

Material was not exposed to mercury or any metal alloy that is liquid at ambient temperature during processing or while in our possession. No weld repairs performed on the above material.

CERTIFICATE OF TEST

BY D. M. KEANE, MGR.-Q A.

CERTIFICATE COPY

274-J -24A630ZA

Ryerson No. 13 IP 699925
Territory 13
Load POOL
Item No. 03

JOSEPH T. RYERSON & SON, INC.

Material Certification

To: UNIVERSITY OF CALIFORNIA
UC BERKELEY LAB
P.O. BOX 528 ATTN A/P
BERKELEYE CA 94710

Your Order Number
6412271

Item Description
ALLOY HR 4140 ANN SS 3/4 x 2 FLT x 8 FT 0

Single/Multiple Heat Number
B7358

Slab/Coil Number (if applicable)
*

Item Instructions
SEND CERTS WITH SHIPMENT
CERTIFIED

A survey of our material sources has indicated that neither mercury nor radioactive substances is introduced into their products, or is used in any of their processes. While we make no independent tests for mercury or radiation, there is nothing in Ryerson's system which could be expected to introduce contamination of either type.

This document certifies that the material described above was shipped on your order and that the attached data is a true copy of the test report furnished by the producer with said material.

September 11 1995

Authorized Agent of
Joseph T. Ryerson & Son, Inc.

Kentucky Electric Steel, Inc.

P.O. Box 3500 • Ashland, Kentucky 41105-3500 • (606) 928-6441
(800) 333-3012 • FAX: (606) 928-2305

SHIP TO: 41206
T.C. INDUSTRIES
RT 31
CRYSTAL LAKE. IL

SOLD TO: J T RYERSON SONS
PO BOX 8000
CHICAGO IL 60680

METALLURGICAL TEST REPORT

We hereby certify that these Chemical and/or Test results are correct as contained in the records of Kentucky Electric Steel, Inc.

By: D.C. Hammonds
D.C. Hammonds, Spec & Testing Coord.

Purchase Order No. 1448839 Mill Order No. 4126 Item No. 0002 Invoice No. 31531

Size 3/4 X 2 S.E. Grade 4140 Shipper No. 3345 Date: 7/07/95
901233 SHIPPER SEQ 58 7:25:48
METRIC: THICKNESS 19.0500MM WIDTH 50.8000MM

HEAT NO.	CHEMICAL ANALYSIS C	MN	P	S	SI	CU	NI	CR	MO	SN	AL	V	NB	T	B	CA	N
B7358	41	87	012	025	33	25	10	90	19								
HEAT NO. 7358	BNH	BNH	BNH	DECRE													

HEAT NO.	Yield Point PSI	Tensile Strength PSI	ELONG % 2"	ELONG % 8"	R/A %	Yield Point PSI	Tensile Strength PSI	ELONG % 2"	ELONG % 8"	R/A %	Bend	CHARPY V-NOTCH IMPACT RESULTS TEMP.	SAMPLE	NOTCH SIZE	Ft. Lbs.	Ft. Lbs.	Ft. Lbs.

HEAT NO.	END QUENCH HARDENABILITY TEST RESULTS "J" DISTANCE IN 16THS 1	2	3	4	5	6	7	8	9	10	11	12	13	14	15	16	20	24	28	32	GRAIN SIZE
B7358	56	56	56	55	55	55	54	53	52	50	48	46	45	44	42	41	38	35	34	32	5-8

275

Since 1881

TC Industries, Inc.
P.O. Box 477
Crystal Lake, Illinois
60039-0477
Telephone 815/459/2400
Fax Mill Products 815/459/2596

TEST REPORT

DATE: June 20, 1995 REF: 50408-54

BILL: KENTUCKY ELECTRIC STEEL
P.O. BOX 3500
ASHLAND, KY 41105-3500

SHIP: JT RYERSON-CHICAGO
16TH & ROCKWELL STS.
CHICAGO IL

DESCRIPTION:

5 PCS: 3/4" X 2" X 20' HEAT # B7358
GRADE: 4140 MO: 4126 CO: 1A48839
LOT #: 6096-81017 PO: 001188-722 WT: 5,508#
DATE IN: 05/15/95

SPECIFICATION:

ANNEAL & STRAIGHTEN IN ACCORDANCE WITH
RYERSON SPEC 8147-B

HEAT TREATMENT:

ANNEALED AT 1360° F FOR 4 HOURS
COOLED TO 1275° F
HOLD FOR 1 HOUR
FURNACE COOLED FOR 12 HOURS
STRAIGHTENED TO 1/8" IN 5 FEET

TEST RESULTS:

HARDNESS SURFACE	HARDNESS MIDRADIUS	HARDNESS CORE	HARDNESS OTHER	HARDNESS SAMPLE
201/207 BHN				

TEST ID	SAMPLE NO	TENSILE STRENGTH	YIELD STRENGTH	ELONGATION IN 2"	REDUCTION OF AREA	CHARPY V-NOTCH

TEST METHOD: ASTM A 370 YIELD STRENGTH BY EXTENSOMETER, 0.2% OFFSET

STATE OF ILLINOIS

COUNTY OF McHENRY

THIS TEST REPORT WAS ACKNOWLEDGED BEFORE ME ON THE 20TH DAY OF JUNE, 1995, BY

Mark Walter.

MARK WALTER
METALLURGIST

"OFFICIAL SEAL"
VALERIANA CARBAJAL
Notary Public, State of Illinois
My Commission Expires 8/26/98

Valeriana Carbajal
NOTARY PUBLIC

REV 4\091594

FORM 309

27K-M · 24A6322A

Ryerson No. 13 IP 699925
Territory 13
Load POOL
Item No. 02

JOSEPH T. RYERSON & SON, INC.

Material Certification

To: UNIVERSITY OF CALIFORNIA
UC BERKELEY LAB
P.O. BOX 528 ATTN A/P
BERKELEYE CA 94710

Your Order Number
6412271

Item Description
ALLOY CF ETD 150 2 RD x 10 FT 0

Single/Multiple Heat Number
81357

Slab/Coil Number (if applicable)
*

Item Instructions
SEND CERTS WITH SHIPMENT
CERTIFIED

A survey of our material sources has indicated that neither mercury nor radioactive substances is introduced into their products, or is used in any of their processes. While we make no independent tests for mercury or radiation, there is nothing in Ryerson's system which could be expected to introduce contamination of either type.

This document certifies that the material described above was shipped on your order and that the attached data is a true copy of the test report furnished by the producer with said material.

September 12 1995

Authorized Agent of
Joseph T. Ryerson & Son, Inc.

27L

CERTIFICATE NO. 143916

LaSalle Steel Company

A SUBSIDIARY OF Quanex

La Salle Steel Company
1412 150th Street
Hammond, IN 46327-1799

NAME OF CARRIER	CAR NUMBER	CUSTOMER ORDER NO.	DATE SHIPPED
CPU	5186131723	1A45758	07/05/95 21:00

SOLD TO

J T RYERSON & SON INC
P O BOX 8000-A
CHICAGO, IL 60680

CONSIGNED TO AND DESTINATION

16TH & ROCKWELL WEST WHSE
BAY #3
CHICAGO IL 60608

ACCT. 56753 O. C. # 2624104 PRODUCT CODE 31608 COLLECT
SALES REP B. [illegible]DACZ SALES SERVICE K. SKAGGS

HEAT	PRD	GC	T.S.	Y.S.	EL	R/A	BHN	PROOF
53387	491	S	153,000	150,000	9.7	37.3	302	
81357	496	B	159,400	154,000	10.0	37.1	321	

HEAT	OZ	H 02	A 03	R 04	D 05	E 06	N 08	A 10	B 12	I 14	L 16	I 20	T 24	Y 28	32
53387	57	57	56	56	55	54	53	50	48	45	43	41	39	38	37
81357	58	58	57	57	56	55	53	51	49	48	44	41	39	38	37

HEAT	GRAIN SIZE	SOURCE	CAST
53387	FINE GRAIN #6-8	COPPERWELD STEEL (USA)	INGOT
81357	FINE GRAIN #6-8	COPPERWELD STEEL (USA)	INGOT

HEAT 53387 MACRO IS EQUAL TO OR BETTER THAN S2R1C2 DECARB.006/.012"

HEAT 81357 MACRO IS EQUAL TO OR BETTER THAN S2R1C2 DECARB.011/.016"

SHIPPING INSTRUCTIONS

TRUCK LOAD:TL UNLOADING:OVERHEAD RECEIVING HOURS FROM/TO: 08:30 15:30
RECEIVING DAYS: MON TUE WED THU FRI
WILL NOT RECEIVE FROM/TO: 09/30/94 THRU 09/30/94
OTHER SALES MUST SCHEDULE SHIPMENT OVERSHIPMENT NOT ALLOWED
NO PARTIAL(S) ALLOWED 6,000 UMX BUNDLE OTHER CERTIFICATION REQUIRED
CALL FOR SCHEDULED DELIVERY.

TOTAL THIS SHIPMENT		6,690
TARE	TOTAL BDLS. 2	GROSS WEIGHT 6,690

WE hereby certify that these goods were produced in compliance with all applicable requirements of sections 6, 7, and 12 of the Fair Labor Standards Act, as amended, and all regulations and orders of the United States Department of Labor issued under section 14 thereof.

PAGE

Material was not exposed to mercury or any metal alloy that is liquid at ambient temperature during processing or while in our possession. No weld repairs performed on the above material.

CERTIFICATE OF TEST BY [illegible] M KEANE MGR-Q A

27M

LaSalle Steel Company

A SUBSIDIARY OF Quanex

La Salle Steel Company
1412 156th Street
Hammond, IN 46327-1799

CERTIFICATE NO. 143916

NAME OF CARRIER	CAR NUMBER	CUSTOMER ORDER NO.	DATE SHIPPED
CPU	3186131728	1A45758	07/05/95 21:00

SOLD TO

J T RYERSON & SON INC
P O BOX 8000-A
CHICAGO, IL 60680

CONSIGNED TO AND DESTINATION

16TH & ROCKWELL WEST WHSE
BAY #3
CHICAGO IL 60608

ACCT. 56753 O. C. # 2624104 PRODUCT CODE 31608 COLLECT
SALES REP B. F[illegible]DACZ SALES SERVICE K. SKAGGS

MATERIAL DESCRIPTION

ORDER QTY	GRADE	SHAPE	SIZE	LENGTH-FROM/TO
10,125 LB	E.T.D. 150(R)	ROUND	2.000	11FT 13FT
			50.80 MM	3352.80 MM 3962.40 MM

ASTM A331-90 & A29-93A AMS 6378E

ITEM INSTRUCTIONS

CUSTOMER ITEM NUMBER: COMM CODE 838422
MARK/PAINT: BLACK AND GOLD WITH YELLOW DOT
REMARKS: SPEC 93846 SPEC M-100 SECTION 9 MAGNETIC TEST REQUIRED
JOMINY REQUIRE OTHER TESTS REQUIRED
QQS-624 SR AS HIGH AS POSSIBLE FOR MIN.WARPAGE ** 5/1 5/8 PER KK 5/2
CONFIRMER RECD 6/9 ADV KK OK FOR 7/1

HEAT	PRO OC	BUNDLE #	ITEM #	BNDL LNGTH	LOCATION	CALC FEET	CALC BARS	SHIPPED WEIGHT
53387	491 5	502022-0 A	10154-3	1200-1200	38-L-14	132	11	1,410
81357	49608	511256-9 A	10154-3	1203-1207	41-K-09	494	40	5,280
					TOTALS	626FT	51PC	6,690LB
						190 M		3,033KG

SHIPPED FROM HAMMOND, INDIANA, F.O.B. OUR PLANT * SHIPMENT COMPLETE *

HEAT	C	MN	P	S	SI	NI	CR	MO	CU	AL	V
53387	.41	.91	.013	.019	.230	.11	1.01	.17	.120	.023	
	SE		TE		BI	AS		B	N		
	.030/.060										
HEAT	C	MN	P	S	SI	NI	CR	MO	CU	AL	V
81357	.4[illegible]	.92	.017	.024	.220	.20	1.01	.18	.140	.018	
	SE		TE		BI	AS		B	N		
	.03 /.060										

TOTAL THIS SHIPMENT			
TARE	TOTAL BOLS 2	GROSS WEIGHT	6,690
	2		6,690

WE hereby certify that these goods were produced in compliance with all applicable requirements of sections 6, 7, and 12 of the Fair Labor Standards Act, as amended, and all regulations and orders of the United States Department of Labor issued under section 14 thereof.

Material was not exposed to mercury or any metal alloy that is liquid at ambient temperature during processing or while in our possession. No weld repairs performed on the above material.

CERTIFICATE OF TEST BY D. M. VEANE, MGR. -Q.A.

27M-0 74A6284A-ITEM (1)

Ryerson No. 13 BY 709590
Territory 13
Load 0T
Item No. 01

JOSEPH T. RYERSON & SON, INC.

Material Certification

To: UNIVERSITY OF CALIFORNIA
UC BERKELEY LAB
P.O. BOX 528 ATTN A/P
BERKELEYE CA 94710

Your Order Number
6412744

Item Description
BEAM I A36 S 12 x 31.8 x 20 FT 0

Single/Multiple Heat Number
HEAT

Slab/Coil Number (if applicable)

Item Instructions
SEND CERTS WITH SHIPMENT
CERTIFIED

A survey of our material sources has indicated that neither mercury nor radioactive substances is introduced into their products, or is used in any of their processes. While we make no independent tests for mercury or radiation, there is nothing in Ryerson's system which could be expected to introduce contamination of either type.

This document certifies that the material described above was shipped on your order and that the attached data is a true copy of the test report furnished by the producer with said material.

September 22 1995

D. E. Jules

Authorized Agent of
Joseph T. Ryerson & Son, Inc.

NORTHWESTERN™ STEEL AND WIRE COMPANY
SINCE 1879

CERTIFIED MILL TEST REPORT

100% MELTED AND MANUFACTURED IN U.S.A.

NUMBER	SHIP DATE	B/L NO.	CUSTOMER P.O. NO.	SHIP METHOD	CAR OR TRUCK NUMBERS	SHIP LOC.	NO. OF COPIES	OSI.	NOT.	CORR	PAGE
5620	07-07-95	76428	L11026 4-25B	RAIL	SP 340578	48	2			28	1

270

SOLD TO

SECTION	SPEC.	LENGTH	PIECES	WEIGHT	HEAT #	YIELD POINT KSI	TENSILE STRENGTH KSI	ELONG % 8"	CHEMICAL COMPOSITION (%) C X100	Mn X100	Si X100	P X1000	S X1000	Cu X100	Ni X100	Cr X100	Mo X1000	V X1000
12 X 31.8	ASTM A36-93A	20' 6.10 METERS	3	1008	77146	59.5	79.5	23.4	21	80	24	10	24	21	10	13	30	30
						59.5	79.4	22.7										
	ASTM A36-93A	20' 6.10 METERS	13	8268	78308	55.9	72.8	25.8	13	79	25	07	27	26	11	11	26	32
						56.8	73.7	25.0										
12 X 31.8	ASTM A36-93A	50' 15.24 METERS	7	11130	78307	55.9	73.6	27.3	10	80	23	11	25	30	12	15	35	32
						55.2	71.0	25.0										

NSI/AWS D1.1-90 PROCEDURES FOR MICRO ALLOYED STEEL SHOULD BE FOLLOWED.

	HEAT	VALUE	O	HEAT	VALUE	O	HEAT	VALUE	O
IMPACT TEST									

REMARKS:

NOTARY PUBLIC IN COUNTY, STATE OF
HEREBY CERTIFY THIS AFFIDAVIT WAS SWORN TO BY
AN AGENT OF NORTHWESTERN STEEL & WIRE COMPANY
R MY NOTARIAL SEAL THIS DAY OF 19

NOTARY PUBLIC MY COMMISSION EXPIRES

WE HEREBY CERTIFY THAT THE STEELS HAVE BEEN TESTED IN ACCORDANCE WITH SPECIFICATIONS

Robert C Olson
MANAGER OF METALLURGY

10.0 MAGNETIC PARTICLE INSPECTION REPORT

WPH Crane Services
3077 Teagarden Street
San Leandro, CA 94577
(800) 480-0049
(510) 352-4720
Fax: (510) 483-0336

MAGNETIC PARTICAL INSPECTION REPORT

JOB W512280002 DATE 12/28/95
CLIENT Lawrence Berkeley Lab
ADDRESS 1 Cyclotron Road
Berkeley, CA 94720
JOB LOCATION Berkeley, CA
CLIENT P.O. NUMBER
ITEM DESCRIPTION Lifting fixture
PLAN OR DRAWING NUMBER
EXAMINATION: PARTIAL X 100%

NDE STANDARD E-709
ACCEPTANCE STANDARD
PROCEDURE NO. CS PT-201
STAGE OF FAB.: IN PROCESS FINAL X
TYPE OF WORK: N/A
HEAT TREATMENT: N/A

EQUIPMENT MANUFACTURER: Magnaflux
MODEL NUMBER: Y7-AC/DC
SERIAL NUMBER: N/A
AC [ ] WET [ ] FLUORESCENT [ ]
DC [X] DRY [X] VISIBLE [X]
PARTICAL TYPE Red 8A Magnaflux
HEAD AMPERAGE N/A
CENTRAL CONDUCTOR AMPERAGE N/A
COIL AMPERAGE N/A
PROD AMPERAGE N/A
SPACING Fully Articulated
AC YOKE [ ] DC YOKE & POLE SPACING [X]
DEMAGNITIZED: YES [ ] NO [X]
OTHER NOT REQUIRED: YES [ ] NO [X]
TYPE: N/A
SURFACE TREATMENT: Clean
MATERIAL: TYPE N/A TEMP N/a

PIECE OR SERIAL NUMBER	ACCEPTED	REJECTED	REMARKS
SLD004-77A Lifting Fixture	✓		

TEST WITNESSED BY:

TECHNICIAN: Lou Pandolfo LEVEL: II
ASST TECH.: Robin Christenson LEVEL:
CERTIFICATION EXPIRATION DATE: 3-8-97
REPORT REVIEWED BY: [signature] 1-15-96
NOT SUPERVISOR

EXAM02 102495