Project

Solenoidal Tracker at RHIC (STAR)

Subproject

Time Projection Chamber - Installation

Title

Structural Analysis of Lower Frame Installation Stand

1.0 Introduction

The Lower Frame Installation Stand, ref. LBL# 21K9035, TPC825-F-1, is used during the installation of the TPC into the magnet. The stand supports the weight of the TPC and its Test Stand while the TPC is prepared to be rolled into the magnet. The following analysis will show that the Lower Frame Installation Stand is structurally sound.

The Lower Frame Installation Stand is made up of 4 vertical 8x8x.050w box beams, 2 vertical C-channels, and two horizontal rails with welded cross bracing bolted to the four corner box beams on each of the four sides. (See Appendix A)

2.0 Beam Buckling:

Weight of TPC at installation $W_{TPC} := 18172 \cdot lbf$

Weight of Test Stand (See Appendix B) $W_{TS} := 5414 \cdot lbf$

Weight of assembly on top of the Lower Frame Installation Stand

$W_{total} := W_{TPC} + W_{TS}$ $\quad W_{total} = 2.359 \cdot 10^4 \cdot lbf$

$W_{ea.leg} := \frac{W_{total}}{4}$ $\quad W_{ea.leg} = 5.896 \cdot 10^3 \cdot lbf$

Length of the vertical legs: $L := 72.8 \cdot in$

Elastic Modulus $E := 30 \cdot 10^6 \cdot \frac{lbf}{in^2}$

Box Beam Moment of Inertia, I:

$w := 8 \cdot in$

$t := .50 \cdot in$

$b_1 := w$ $\quad h_1 := b_1$

$b_2 := b_1 - 2 \cdot t$ $\quad h_2 := b_2$

$I := \frac{1}{12} \cdot \left(b_1 \cdot h_1^3 - b_2 \cdot h_2^3 \right)$ $\quad I = 141.25 \cdot in^4$

Critical Buckling Load, Pcr:

(See Appendix C)

$$P_{cr} := \frac{\pi \cdot E \cdot I}{L^2} \qquad SF := \frac{P_{cr}}{W_{ea.leg}}$$

$P_{cr} = 2.512 \cdot 10^6 \cdot lbf$ $SF = 425.993$

3.0 Side Loading: In the event of an earthquake, the TPC, Test Stand and LFI Stand assembly could under go a sideways acceleration which could cause collapse or overturning if the assembly is not properly constrained. The following analysis will show that the assembly can safely survive a horizontal acceleration of .2 g's.

3.1 Load Conditions:

Weight of the Lower Frame Installation Stand (See Appendix B) $W_{LFIS} := 5300 \cdot lbf$

$$W_{tot} := W_{LFIS} - W_{TS} + W_{TPC} \qquad W_{tot} = 2.889 \cdot 10^4 \cdot lbf$$

$$P_{side} := W_{tot} \cdot .2 \qquad P_{side} = 5.777 \cdot 10^3 \cdot lbf$$

The C.G. of the Lower Frame Installation Stand, the TPC, and the Test Stand assembly is approximately

$CGz_{TPC} := 82 \cdot in$ $CGz_{TS} := 41 \cdot in$ $CGz_{LFIS} := 42 \cdot in$

$offset_{TPC} := 87.4 \cdot in$ $offset_{TS} := 78.4 \cdot in$

$$CG := \frac{\left(CGz_{TPC} + offset_{TPC}\right) \cdot W_{TPC} - \left(CGz_{TS} + offset_{TS}\right) \cdot W_{TS} + CGz_{LFIS} \cdot W_{LFIS}}{W_{tot}}$$

$CG = 136.653 \cdot in$

3.2 Shear off Anchor Bolts. A side load would put the LFI Stand anchor bolts, 16x ø1/2, in shear: (See Appendix C)

$A_{bolt} := .142 \cdot in^2$ $N_{bolt} := 16$

Shear Stress per bolt:

$$\tau := \frac{P_{side}}{A_{bolt} \cdot N_{bolt}} \qquad \tau = 2.543 \cdot 10^{3} \cdot psi$$

Yield Stress for the bolts is: $\sigma_y := 36000 \cdot psi$ (Assumes Grade 1 Fastener)

$$SF_{bolts} := \frac{\sigma_y}{\tau} \qquad SF_{bolts} = 14.158$$

3.3 Overturning. The side load would also act as an overturning force. If the LFI Stand pivoted about one pair of feet this would cause a pull out load on the bolts of the other pair of feet. (See Appendix C)

The overturning moment would be:

$M_{ot} := P_{side} \cdot CG$ $\qquad M_{ot} = 7.895 \cdot 10^{5} \cdot in \cdot lbf$

The lever arm between the first pair of feet and the second pair is: $X := 172 \cdot in$
(Worst case direction assumed)

The pull out force is then:

$$F_{po} := \frac{M_{ot}}{X} \qquad F_{po} = 4.59 \cdot 10^{3} \cdot lbf$$

The feet are anchored to the floor by 4 ø3/4" A36 Steel Cap Screws at each leg.

$N_{bolt} := 8$ $\qquad A_{bolt} := .334 \cdot in^2$

$$\sigma_{po} := \frac{F_{po}}{N_{bolt} \cdot A_{bolt}} \qquad \sigma_{po} = 1.718 \cdot 10^{3} \cdot psi$$

$$SF := \frac{\sigma_y}{\sigma_{po}} \qquad SF = 20.957$$

3.4 **Side Frame Bending/Tensile Stress:**

A Finite Element Analysis (FEA) program, ANSYS version 5.3, was used to analyze the stresses in the truss like side frame of the Lower Frame Installation Stand. Half the side load was applied to the Test Stand at the height of the assembly CG. (There are two side frames so all the loads will be halved.) Half of the weight of the TPC was added to the top of the Test Stand Frame work and half of the Test Stand Weight was added to the top of the Lower Stand side frame. See Appendix D1 for the loading conditions and the results output.

As can be seen from figure D1.5, the maximum axial stress is in the diagonal cross bracing of the lower stand. The diagonal cross brace has a compressive stress (or tensile, depending on the direction of the side load) of 745 psi. When the combined axial and bending stress is taken into account, the maximum stress in the Lower Stand occurs at element 16, one of the lower horizontal members of the truss. (See Appendix D1.6) The maximum stress is 2776 psi. Structural steel has a yield strength of 36,000.

$\sigma_{side} := 2776 \cdot psi$ $\sigma_y := 36000 \cdot psi$ $SF := \frac{\sigma_y}{\sigma_{side}}$ $SF = 12.968$

3.5 End Frame Bending/Tensile Stress:

A Finite Element Analysis (FEA) program, ANSYS version 5.3, was used to analyze the stresses in the truss like end frame of the Lower Frame Installation Stand. The LFIS with the Test Stand on top were modeled and the TPC was represented as a single horizontal spar attached to the top of the Test Stand. The TPC adds significant stiffness to the stand assembly in the end view, hence the need to account for it. There was no node near the assembly's CG so instead, half the side load due to just the TPC was applied to the top of the vertical posts on the Test Stand Frame where the TPC attaches, which is also at the same elevation as the TPC's CG. (There are two side frames so all the loads will be halved.) Half the side load due to the Test Stand and the Lower Stand was applied at the CG for the assembly of the two units. Half of the weight of the TPC was added to the top of the Test Stand Frame work and half of the Test Stand Weight was added to the top of the Lower Stand side frame. See Appendix D2 for the loading conditions and the results output.

The maximum stress in the Lower Stand occurs at element 13, one of the vertical supports that the Test Stands attaches to. (See Appendix D2.6) The maximum stress is 2235 psi. Stuctural steel has a yield strength of 36,000.

$\sigma_{end} := 2235 \cdot psi$ $\sigma_y := 36000 \cdot psi$ $SF := \frac{\sigma_y}{\sigma_{end}}$ $SF = 16.107$

4.0 Conclusions

The stresses in the TPC Lower Frame Installation Stand when it is in use for supporting the TPC Test Stand and the TPC are low. There is a factor of safety of over 425 on the vertical support columns buckling. A .2 g horizontal load on the TPC, TPC Test Stand, and Lower Stand will only generate 2776 psi of stress in one of the horizontal truss members in the Lower Stand's side frame. This gives a factor of safety of 13 on the yield stress of the structural steel.

APPENDIX A

RELEVANT ASSEMBLY DRAWINGS:

TPC INSTALLATION: 12
TPC825-F-1 LOWER FRAME LAYOUT

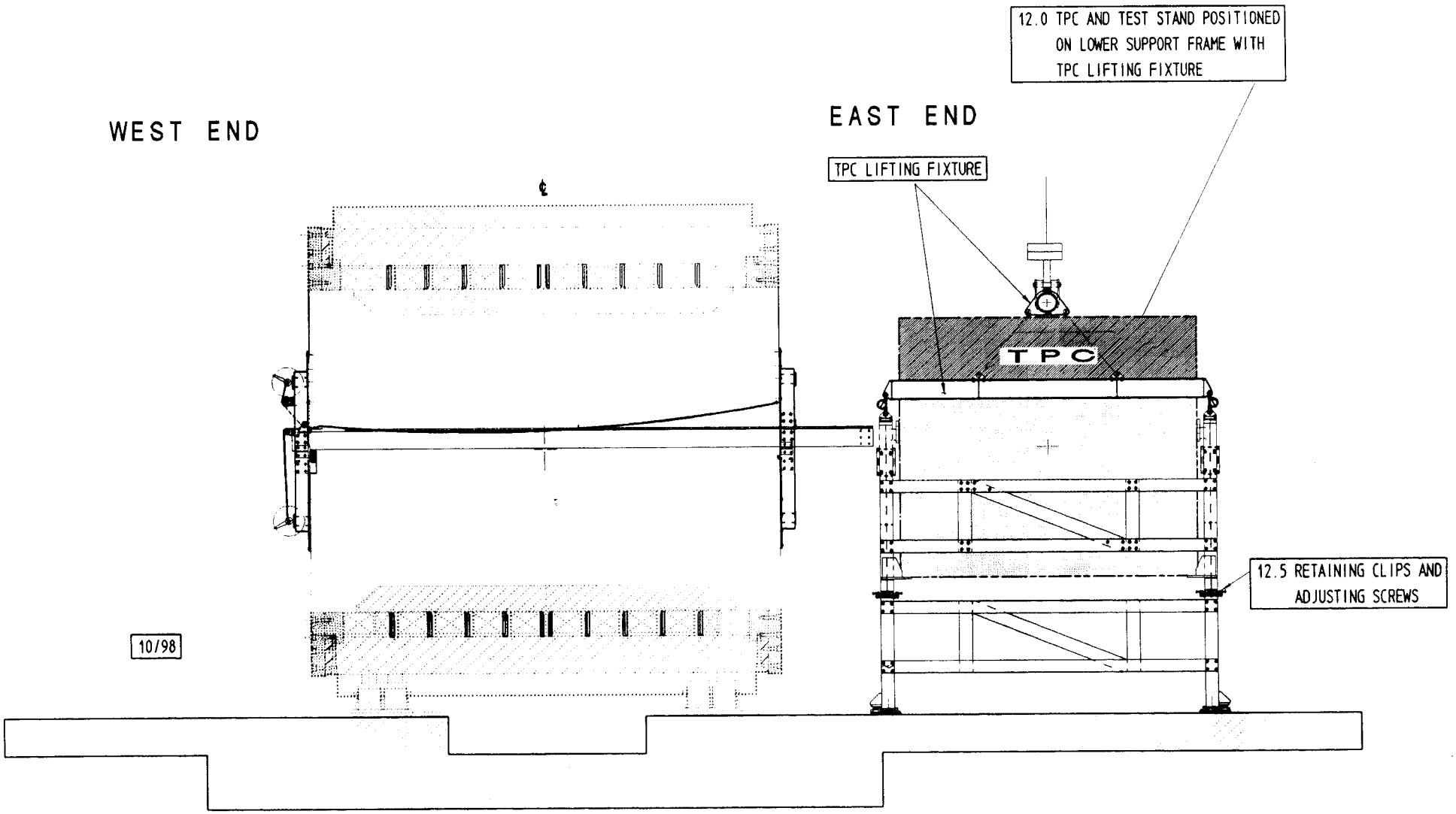

TPC INSTALLATION : 12.0

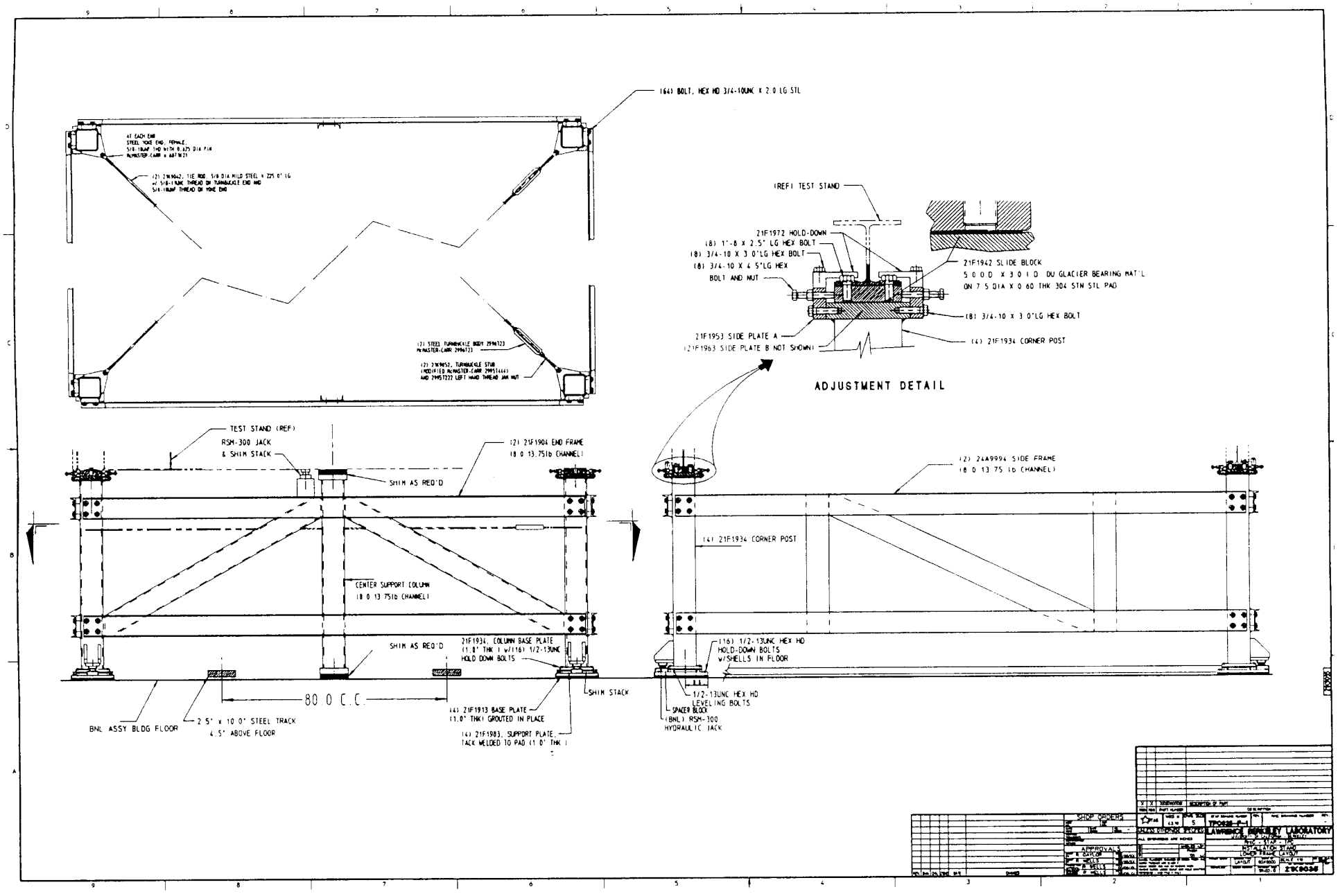
(64) BOLT, HEX HD 3/4-10UNC X 2.0 LG STL
AT EACH END
STEEL YOKE END, FEMALE,
5/8-18UNF THD WITH 0.625 DIA PIN
McMASTER-CARR # 68T9623
(2) 2W9642, TIE ROD, 5/8 DIA MILD STEEL X 225.0" LG
w/ 5/8-18UNF THREAD ON TURNBUCKLE END AND
5/8-18UNF THREAD ON YOKE END
(2) STEEL TURNBUCKLE BODY 2996723
McMASTER-CARR 2996723
(2) 2W9652, TURNBUCKLE STUB
(MODIFIED McMASTER-CARR 29951444)
AND 29957222 LEFT HAND THREAD JAM NUT
(REF) TEST STAND
21F1972 HOLD-DOWN
(8) 1"-8 X 2.5" LG HEX BOLT
(8) 3/4-10 X 3.0"LG HEX BOLT
(8) 3/4-10 X 4.5"LG HEX
BOLT AND NUT
21F1942 SLIDE BLOCK
5.0 O.D. X 3.0 I.D. DU GLACIER BEARING MAT'L
ON 7.5 DIA X 0.60 THK 304 STN STL PAD
(8) 3/4-10 X 3.0"LG HEX BOLT
21F1953 SIDE PLATE A
(21F1963 SIDE PLATE B NOT SHOWN)
(4) 21F1934 CORNER POST
ADJUSTMENT DETAIL
TEST STAND (REF)
RSM-300 JACK
& SHIM STACK
(2) 21F1904 END FRAME
(8.0 13.75lb CHANNEL)
SHIM AS REQ'D
(2) 24A9994 SIDE FRAME
(8.0 13.75 lb CHANNEL)
(4) 21F1934 CORNER POST
CENTER SUPPORT COLUMN
(8.0 13.75lb CHANNEL)
SHIM AS REQ'D
21F1934, COLUMN BASE PLATE
(1.0" THK) w/(16) 1/2-13UNC
HOLD DOWN BOLTS
(16) 1/2-13UNC HEX HD
HOLD-DOWN BOLTS
w/SHELLS IN FLOOR
80.0 C.C.
SHIM STACK
1/2-13UNC HEX HD
LEVELING BOLTS
SPACER BLOCK
(BNL) RSM-300
HYDRAULIC JACK
(4) 21F1913 BASE PLATE
(1.0" THK) GROUTED IN PLACE
(4) 21F1983, SUPPORT PLATE,
TACK WELDED TO PAD (1.0" THK)
BNL ASSY BLDG FLOOR
2.5" x 10.0" STEEL TRACK
4.5" ABOVE FLOOR
SHOP ORDERS
APPROVALS
LAWRENCE BERKELEY LABORATORY
RSM-STAR-TRP
INSTALLATION STAND
LOWER FRAME LAYOUT
21K9035

21K9035

APPENDIX B

WEIGHT CALCULATIONS:

B1. WEIGHT OF TEST STAND
B2. WEIGHT OF LOWER FRAME INSTALLATION STAND

WEIGHT ESTIMATE - TPC TEST STAND

1410 A. SIDE FRAMES (24A9994) = 705 lbs. ea

B. END BEAM (24A6344) = 550 lbs

C. SUPPORT COLUMN (24A6334)

1) 10" WF 39 lb/ft x 100/12 = 325 lbs

2) bottom plate ~ (13 in x 30 in x 1 in)
390 in³ x .283 lb/in³ = 110 lbs

3) lg gusset ~ (1/2 x 33.6 x 18.7 x 1)
314 in³ x .283 lb/in³ = 89 lbs

4) sm. gusset ~ (12.5 x 12.1 x 1)
151 in³ x .283 lb/in³ = 43 lbs

5) 2nd sm gusset = 43 lbs

6)&7) interior gussets
2x(8x8x.375) + 2x(5x8x.375)
78 in³ x .283 lb/in³ = 22 lbs

8) 3x5x8 = 120 in³ x .283 lb/in³ = 34 lbs

6666 lbs ea

D. INSTALLATION BEAM ROLLER SUPPORT BRKT, ? 24A8174? = 60 lbs ea

GRAND TOTAL 2(705) + 2(550) + 4(666) + 4(60)

= 5414 lbs

TEST STAND C.G.

$Z_{\text{SIDE RAILS \& POST}} = 50$ inches

$Z_{\text{end beams}} = 4$ inches

$$\frac{(1100\text{ lbs})(4) + (4300)(50)}{5400} = \bar{Z} \cong 41 \text{ inches}$$

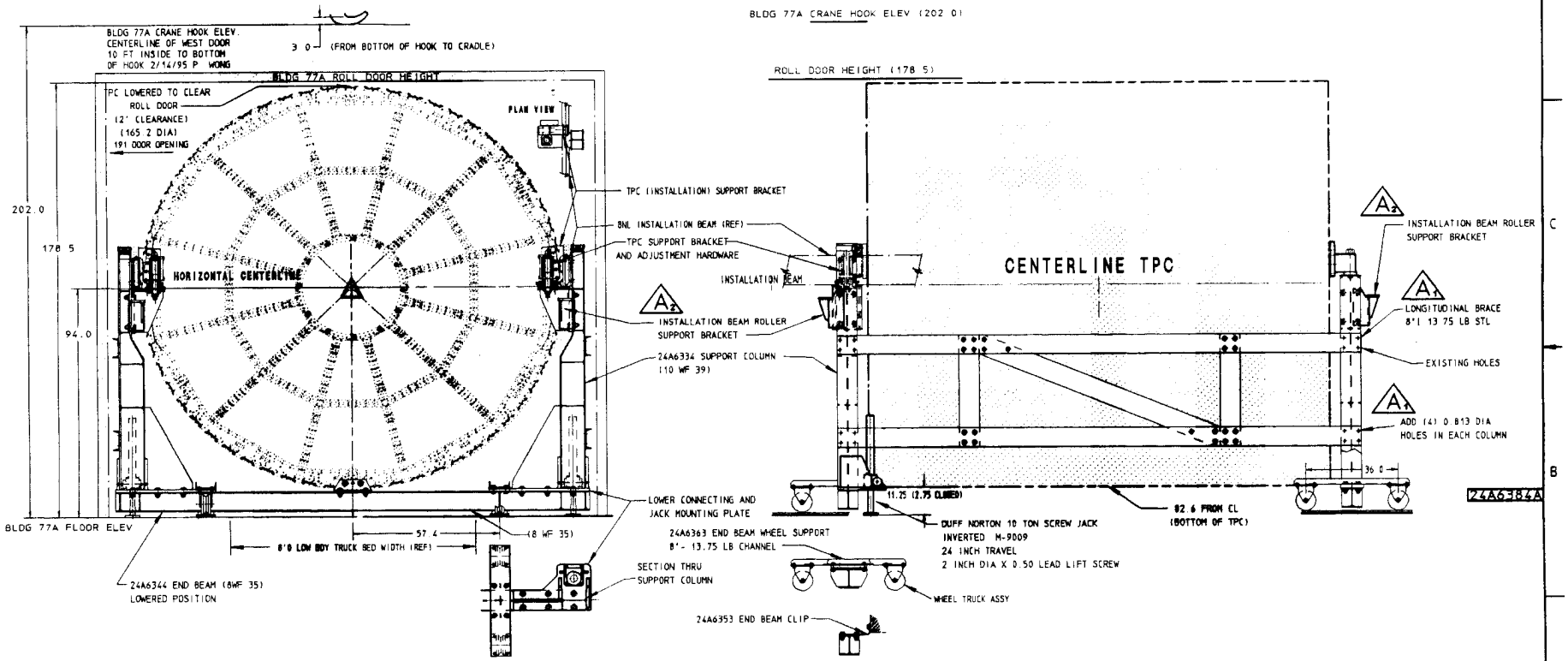

REV	DWG	CHK	ZONE	DATE	CHANGES
A2	RJC			6/96	ADD INSTALLATION ROLLER SUPPORT BRACKETS
A1	RJC			6/96	ADD LONGITUDINAL BRACES

UNLESS OTHERWISE SPECIFIED
TOLERANCES: X ± FRAC ± XX ± ANGLES ± XXX ± FINISH
THREADS ARE CLASS 2
CHAMFER ENDS OF ALL SCREW THREADS 30° OR 1.5 PITCH THRU SELVEY WITH BROAD NOSE TOOL ON MACHINE CUT THREADS
BREAK EDGES .016 MAX. ON MACHINED WORK
REMOVE BURRS WELD SPLATTER & LOOSE SCALE
REFERENCES ANSI Y14.5 & B46.1

SHOP ORDERS
ACCT NO. SERIAL NO.
DATE ISSD DATE REQD MO REQD
DELIVER TO
SURFACE TREATMENT
INSTRUMENT
DWG BY R. CAYLOR DATE 10-03-95
CHK BY DATE

LAWRENCE BERKELEY LABORATORY
UNIVERSITY OF CALIFORNIA-BERKELEY
RHIC - STAR - TPC
ASSEMBLY AND TEST STAND
TEST STAND LAYOUT
PATENT CLEAR DWG TYPE LAYOUT SHOWN ON SCALE 1 20 DO NOT SCALE PRINTS
MICROFILMED CATEGORY CODE SR0210 DWG. NO. 24A6384 SIZE REV A

REQ	ITEM	PART NUMBER	DESCRIPTION
1	1		10" WF 39 LB/FT A-36 STEEL
1	2		PLATE, ASTM A-36 STEEL X 1.0 THK
1	3		PLATE, ASTM A-36 STEEL X 1.0 THK
1	4		PLATE, ASTM A-36 STEEL X 1.0 THK
1	5		PLATE, ASTM A-36 STEEL X 1.0 THK
4	6		PLATE, ASTM A-36 STEEL X 0.375 THK
4	7		PLATE, ASTM A-36 STEEL X 0.375 THK
1	8		PLATE, ASTM A-36 STEEL X 3.0 THK

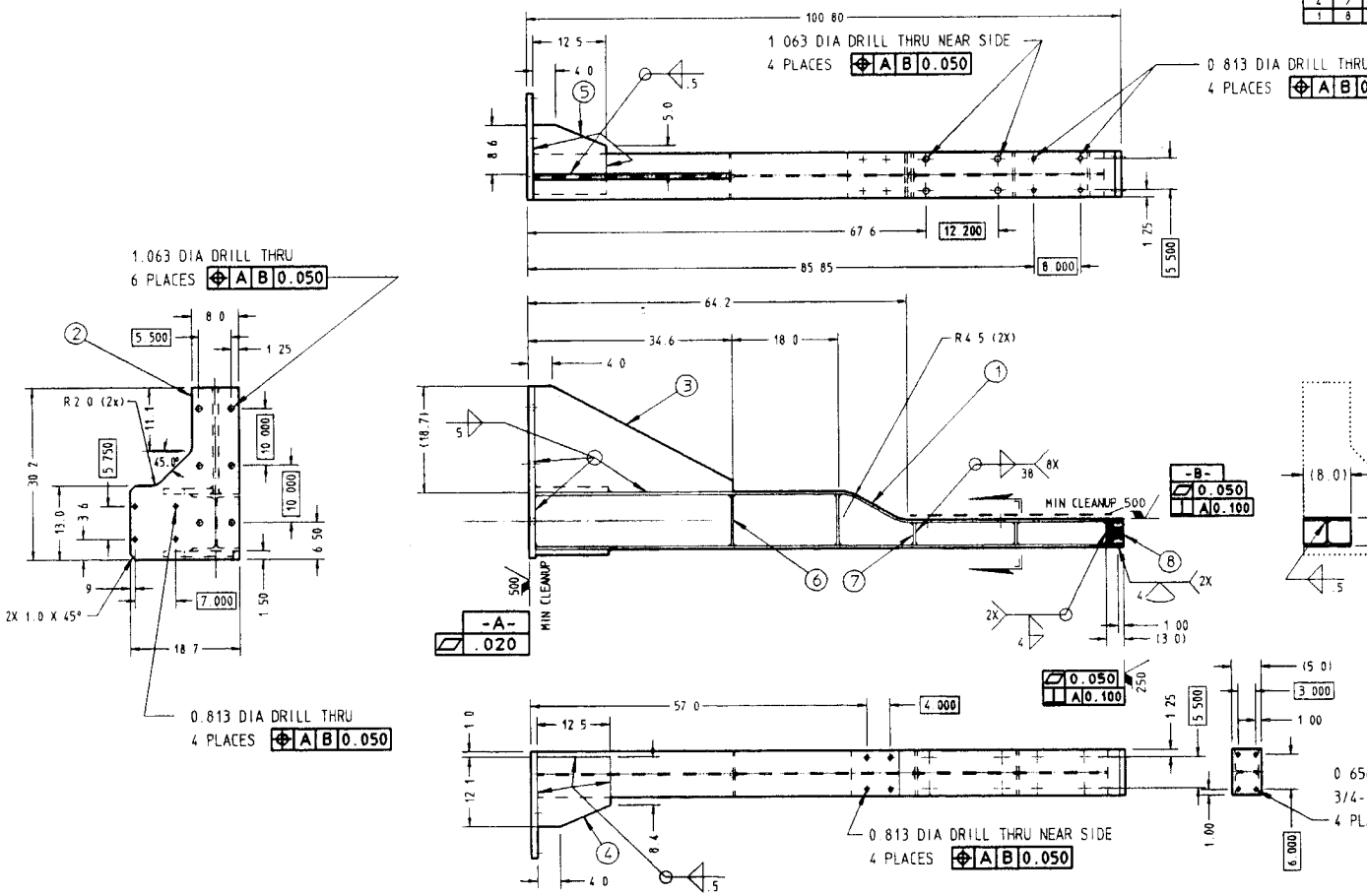

NOTES:

1. SANDBLAST, PRIME & FINISH 1 COAT RUSTOLEUM NATIONAL BLUE.
2. ESTIMATED WT. = 580 LBS

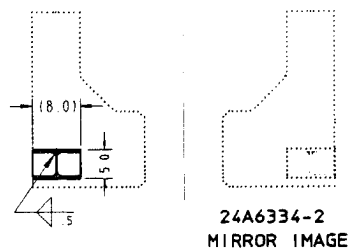

24A6334-2
MIRROR IMAGE

24A6334

PART NO	DESCRIPTION
24A6334-2	MIRROR IMAGE
24A6334-1	AS SHOWN

LAWRENCE BERKELEY LABORATORY
UNIVERSITY OF CALIFORNIA-BERKELEY
RHIC - STAR - TPC
ASSEMBLY AND TEST STAND
SUPPORT COLUMN

UNLESS OTHERWISE SPECIFIED		SHOP ORDERS	
TOLERANCES	X ± .1	ACCT NO	SERIAL NO
	XX ± .03	DATE ISSD	DATE REQD	NO REQD
	XXX ±	DELIVER TO	
		SURFACE TREATMENT	SEE NOTE 1
		DWN BY	R. CAYLOR	DATE 9-11-95
		CHK BY	R. WELLS	DATE 9-26-95

THREADS ARE CLASS 2
CHAMFER ENDS OF ALL SCREW THREADS 30° OR 1.5 PITCH THRU RELIEF WITH BOUND HOLE TOOL ON MACHINE CUT THREADS
BREAK EDGES .016 MAX. ON MACHINED WORK
REMOVE BURRS WELD SPLATTER & LOOSE SCALE
REFERENCES ANSI Y14.5 & B46.1

REV	DWG	CHK	ZONE	DATE	CHANGES

PATENT CLEAR	DWG TYPE	SHOWN ON	SCALE	DO NOT SCALE
	C-DET	24A6384	1 10	
MICROFILMED	DESIGN ACCT NO	CATEGORY CODE	DWG NO	SIZE	REV
		SR0210	24A6334	

REQ	ITEM	PART NUMBER	DESCRIPTION
1	ITEM		8 WF 35 0 LB/FT STEEL
4	ITEM		8 WF 35 0 LB/FT STEEL
10	ITEM		PLATE, .38 THK A-36 STEEL

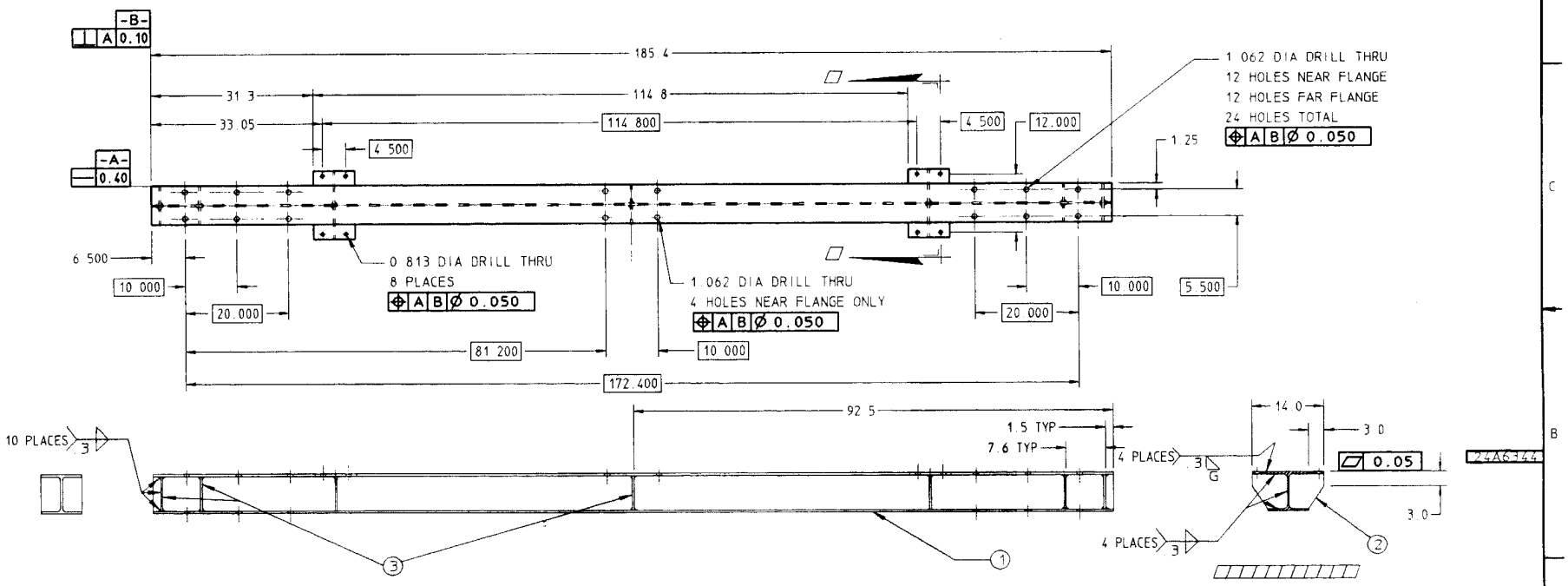

NOTES

1. SANDBLAST, PRIME & FINISH 1 COAT RUSTOLEUM NATIONAL BLUE.

2. ESTIMATED WEIGHT = 550 LBS

REV	DWG	CHK	ZONE	DATE	CHANGES

UNLESS OTHERWISE SPECIFIED
TOLERANCES: X ± 1, XX ± .03, XXX ±, FRAC ±, ANGLES ±, FINISH 500
THREADS ARE CLASS 2
CHAMFER ENDS OF ALL SCREW THREADS 30° OUT 1.5 PITCH DWG RELIEF WITH BOARD NONE TOOL ON MACHINE CUT THREADS
BREAK EDGES .016 MAX. ON MACHINED WORK
REMOVE BURRS WELD SPLATTER & LOOSE SCALE
REFERENCES ANSI Y14.5 & B46.1

SHOP ORDERS
ACCT NO. / SERIAL NO.
DATE ISSD / DATE REQD / NO REQD
DELIVER TO
SURFACE TREATMENT SEE NOTE 1
TOTAL WELD
DWN BY R. CAYLOR DATE 9-29-95
CHK BY R. WELLS DATE 9-29-95

LAWRENCE BERKELEY LABORATORY
UNIVERSITY OF CALIFORNIA-BERKELEY
RHIC - STAR - TPC
ASSEMBLY AND TEST STAND
END BEAM

PATENT CLEAR	DWG TYPE	SHOWN ON	SCALE	DO NOT SCALE DRAWING
	C-DET	24A6384	1 10	
MICROFILMED	DESIGN ACCT NO	CATEGORY CODE	DWG NO	SIZE / REV
		SR0210	24A6344	

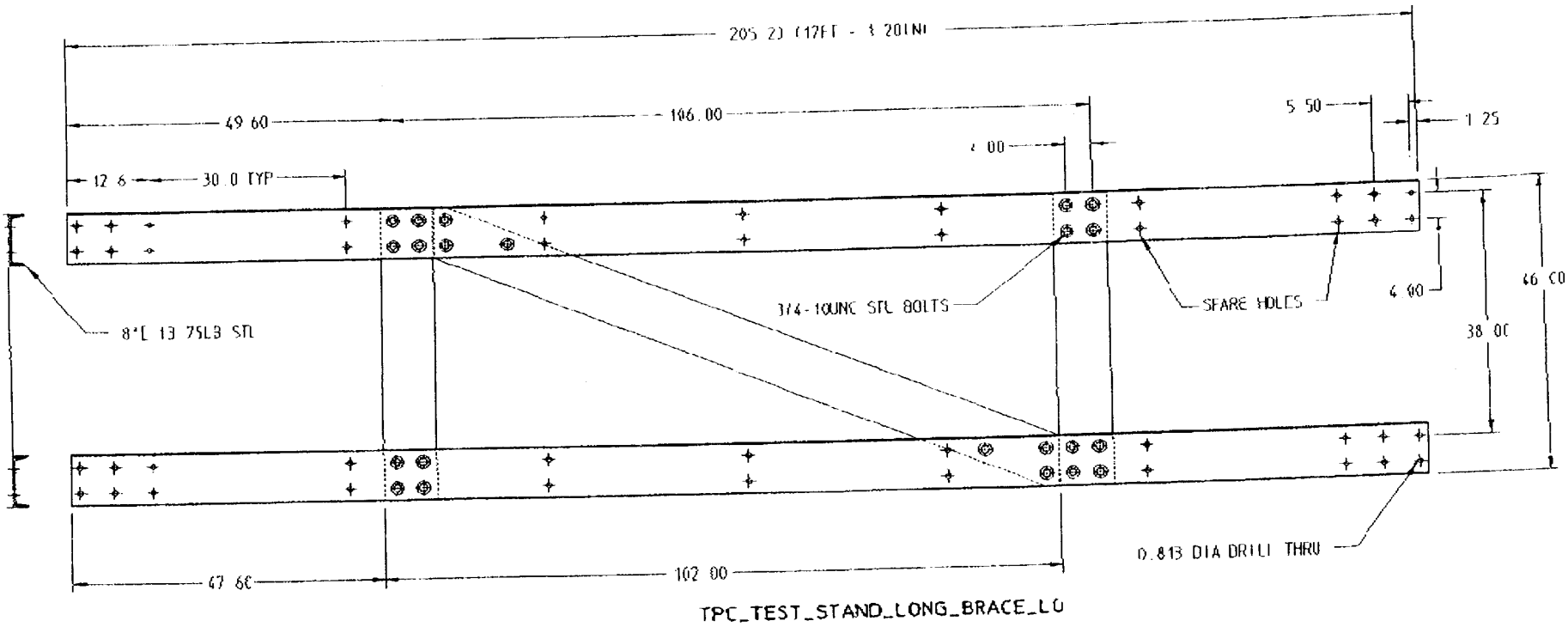

TPC TEST STAND LONGITUDINAL BRACE LAYOUT

ESTIMATED WEIGHT OF LOWER FRAME INSTALLATION STAND

A CORNER POSTS TUBE: $69.8'' \times 4 \times 8'' \times 1/2'' \Rightarrow 1117\ in^3$

$1117\ in^3 \times .283\ lb/in^3 = 316\ lbs$

END: $10'' \times 10'' \times 2'' \times .283\ lb/in^3 = 56\ lbs$

OTHER END: $10.5'' \times 10.5'' \times 1'' \times .283\ lb/in^3 = 31\ lbs$

PAD: $6.5'' \times 8'' \times 1.5'' \times .283\ lb/in^3 = 22\ lbs$ ea

SHELF: $2 \times (7 \times 7 \times 1 \times 1/2) \times .283 +$
$(6.5 \times 5 \times 1) \times .283 = 23\ lbs$

TOTAL $= 316 + 56 + 31 + 4(22) + 23 = 483\ lbs$ ea

B. SIDE FRAME = 705 lbs ea

C. END FRAME = 775 lbs ea

D BASE PLATE $= (19 \times 15.2 \times 1.25) * .283 = 102\ lbs$

GRAND TOTAL $4(483) + 2(705) + 2(775) + 4(102)$
$= 5300\ lbs$

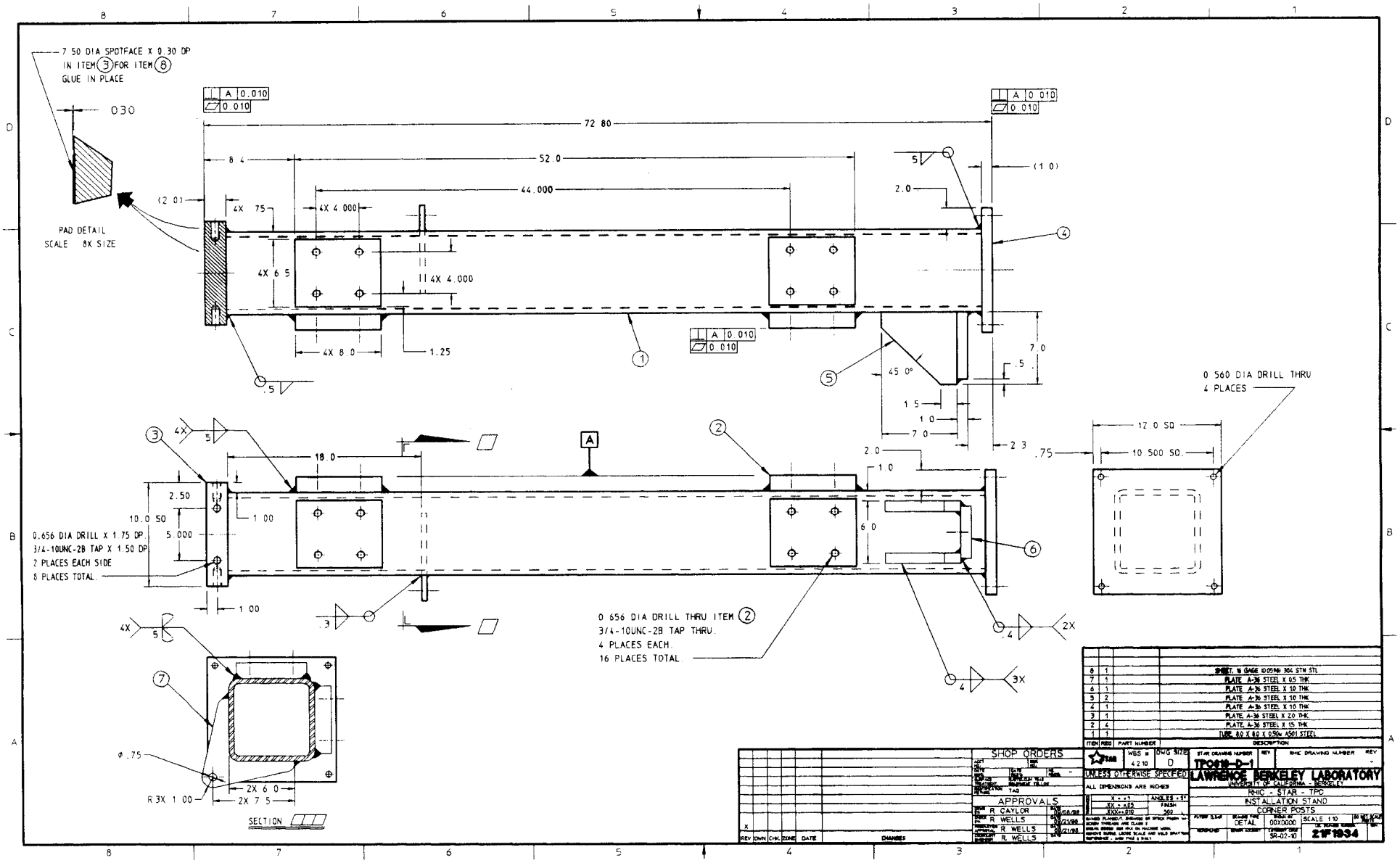
7.50 DIA SPOTFACE X 0.30 DP
IN ITEM 3 FOR ITEM 8
GLUE IN PLACE
.030
PAD DETAIL
SCALE 8X SIZE
72.80
52.0
44.000
8.4
(2.0)
4X .75
4X 4.000
4X 6.5
4X 8.0
1.25
(1.0)
2.0
45.0°
7.0
.5
1.5
1.0
2.3
0.560 DIA DRILL THRU
4 PLACES
12.0 SQ
10.500 SQ.
.75
18.0
2.50
10.0 SQ
5.000
1.00
6.0
0.656 DIA DRILL X 1.75 DP.
3/4-10UNC-2B TAP X 1.50 DP.
2 PLACES EACH SIDE
8 PLACES TOTAL.
0.656 DIA DRILL THRU ITEM 2
3/4-10UNC-2B TAP THRU.
4 PLACES EACH.
16 PLACES TOTAL.
2X
3X
ø.75
R3X 1.00
2X 6.0
2X 7.5
SECTION
SHOP ORDERS
APPROVALS
R CAYLOR
R WELLS
R WELLS
R WELLS
UNLESS OTHERWISE SPECIFIED
ALL DIMENSIONS ARE INCHES
X = ±.1
XX = ±.05
XXX = ±.010
ANGLES = 5°
FINISH
500
SHEET, 16 GAGE (0.0598) 304 STN STL
PLATE A-36 STEEL X 0.5 THK
PLATE A-36 STEEL X 1.0 THK
PLATE A-36 STEEL X 1.0 THK
PLATE A-36 STEEL X 1.0 THK
PLATE A-36 STEEL X 2.0 THK
PLATE A-36 STEEL X 1.5 THK
TUBE 8.0 X 8.0 X 0.50w A501 STEEL
ITEM
REQ
PART NUMBER
DESCRIPTION
STAR
WBS # 4210
DWG SIZE D
STAR DRAWING NUMBER
TPC010-D-1
RHIC DRAWING NUMBER
LAWRENCE BERKELEY LABORATORY
UNIVERSITY OF CALIFORNIA - BERKELEY
RHIC - STAR - TPC
INSTALLATION STAND
CORNER POSTS
DETAIL
00X0000
SCALE 1:10
SR-02-10
21F1934

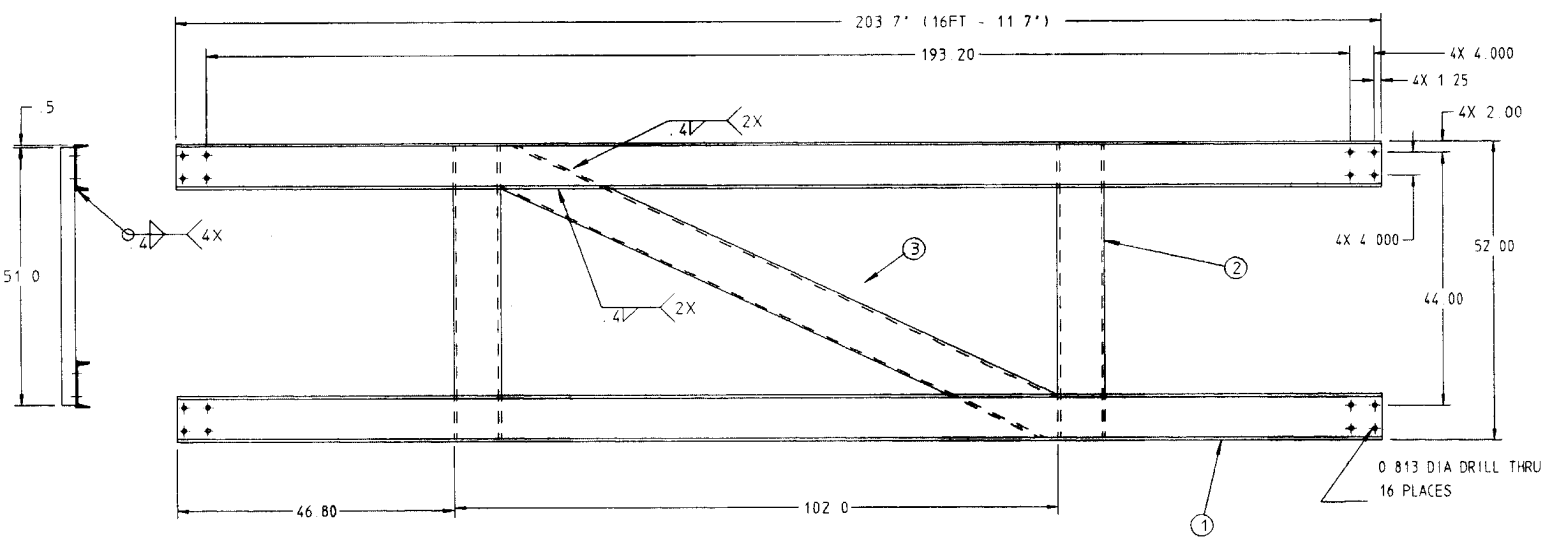

ITEM	REQ	PART NUMBER	DESCRIPTION
3	1		8.0 (8.75 LB A-36 STEEL
2	2		8.0 (13.75 LB A-36 STEEL X 45.0" LG
1	2		8.0 (13.75 LB A-36 STEEL X 205.2" (17-12") LG

REV	DWN	CHK	ZONE	DATE	CHANGES
X					

SHOP ORDERS

APPROVALS

R. CAYLOR
R. WELLS
R. WELLS
R. WELLS

UNLESS OTHERWISE SPECIFIED
ALL DIMENSIONS ARE INCHES

X = ±1	ANGLES ± 5°	
XX = ±.05	FINISH	
XXX=±.010	500	

STAR DRAWING NUMBER: TPO816-D-1
REV
RHIC DRAWING NUMBER
REV: -

LAWRENCE BERKELEY LABORATORY
UNIVERSITY OF CALIFORNIA - BERKELEY

RHIC - STAR - TPD
INSTALLATION STAND
SIDE FRAME

DETAIL
00X0000
SCALE 1:10
SR-02-10
24A9994

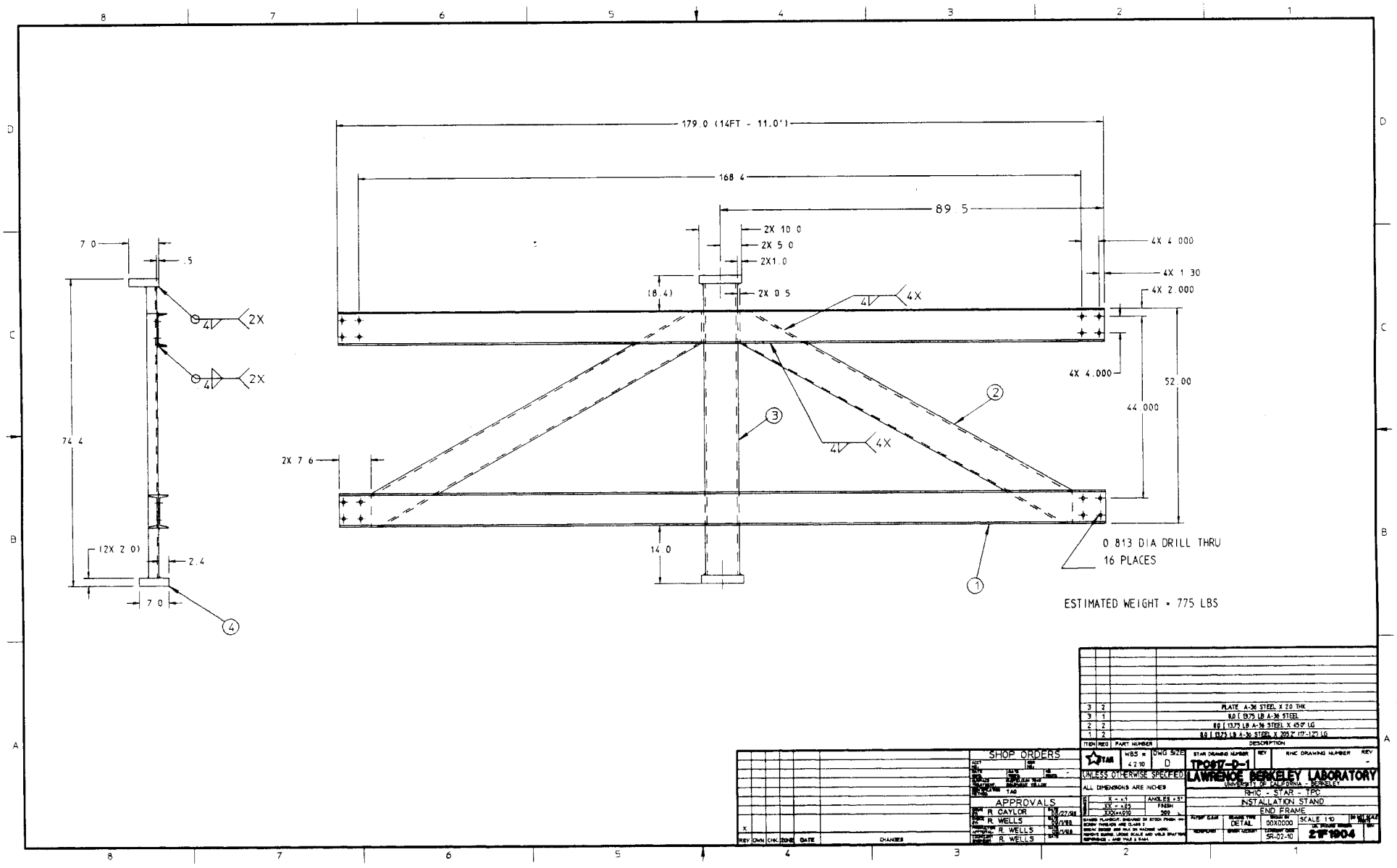

179.0 (14FT - 11.0')
168.4
89.5
2X 10.0
2X 5.0
2X1.0
2X 0.5
(8.4)
4X 4.000
4X 1.30
4X 2.000
4X 4.000
52.00
44.000
2X 7.6
14.0
0.813 DIA DRILL THRU
16 PLACES
ESTIMATED WEIGHT = 775 LBS
7.0
.5
74.4
(2X 2.0)
2.4
7.0
2X
4X
1
2
3
4
3 2 PLATE A-36 STEEL X 2.0 THK
3 1 8.0 [13.75 LB A-36 STEEL
2 2 8.0 [13.75 LB A-36 STEEL X 45.0" LG
1 2 8.0 [13.75 LB A-36 STEEL X 205.2" (17'-1.2") LG
ITEM REQ PART NUMBER DESCRIPTION
STAR
WBS = 4.2.10
DWG SIZE D
STAR DRAWING NUMBER TPC017-D-1
REV
RHIC DRAWING NUMBER
REV -
UNLESS OTHERWISE SPECIFIED
ALL DIMENSIONS ARE INCHES
X = ±.1
XX = ±.05
XXX=±.010
ANGLES ±.5°
FINISH 500
LAWRENCE BERKELEY LABORATORY
UNIVERSITY OF CALIFORNIA - BERKELEY
RHIC - STAR - TPC
INSTALLATION STAND
END FRAME
DETAIL
00X0000
SCALE 1:10
SR-02-10
21F1904
SHOP ORDERS
APPROVALS
R. CAYLOR
R. WELLS
R. WELLS
R. WELLS
REV DWN CHK ZONE DATE CHANGES

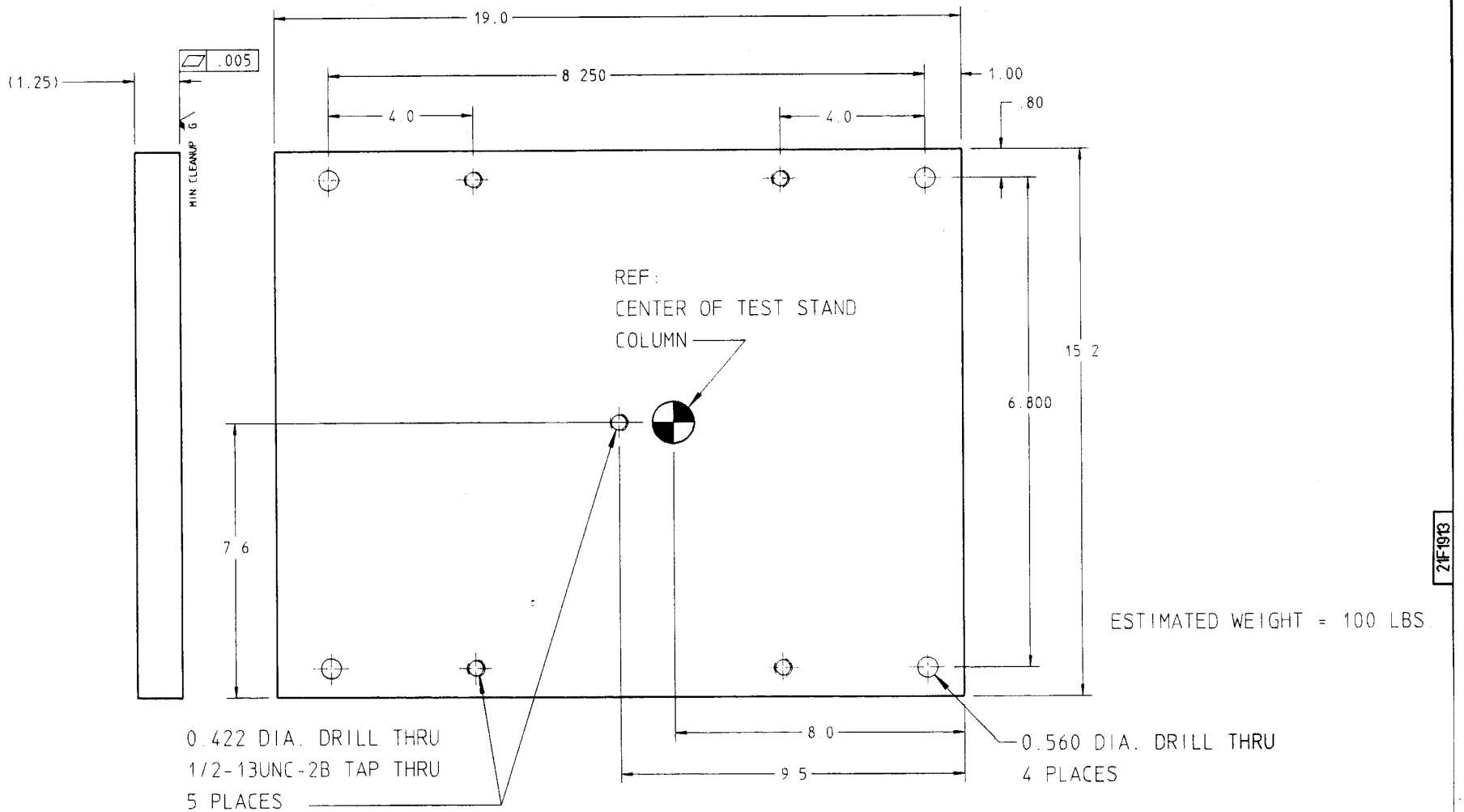

21F1913

ITEM	REQ	PART NUMBER	DESCRIPTION
			PLATE, 1.25" THK A-36 STEEL

WBS #	DWG SIZE	STAR DRAWING NUMBER	REV.	RHIC DRAWING NUMBER	REV.
4.2.10	C	TPC812-C-1	-		-

UNLESS OTHERWISE SPECIFIED
ALL DIMENSIONS ARE INCHES

TOLERANCES		
X = ±.06	ANGLES ±5°	
XX = ±.03	FINISH	
XXX = ±.015	250	

SAWED, FLAMECUT, SHEARED OR STOCK FINISH
ALL SCREW THREADS ARE CLASS 2
BREAK EDGES .030 MAX ON MACHINE WORK
REMOVE BURRS, LOOSE SCALE AND WELD SPATTER
REFERENCE - ANSI Y14.5 & B46.1

LAWRENCE BERKELEY LABORATORY
UNIVERSITY OF CALIFORNIA - BERKELEY

RHIC - STAR - TPC
INSTALLATION STAND
BASE PLATE

PATENT CLEAR	DRAWING TYPE	SHOWN ON	SCALE 1:2	DO NOT SCALE PRINTS
REQUIRED	DETAIL	00X0000	LBL DRAWING NUMBER 21F1913	REV.
	DESIGN ACCOUNT 7909-40	CATEGORY CODE SR-02-10		

SHOP ORDERS

ACCT NO.	SER NO.
DATE ISSD	DATE REQ'D
NO. ASSYD -
SURFACE TREATMENT WD-40/WRAP
IDENTIFICATION METHOD TAG

APPROVALS

		DATE
DRWN BY	R.CAYLOR	7/28/98
CHECK BY	R.WELLS	8/10/98
PRODUCTION APPROVAL	R.WELLS	8/10/98
COGNIZANT ENGINEER	R.WELLS	

REV.	DWN	CHK	DATE	CHANGES

APPENDIX C

SKETCHES OF THE DIFFERENT FAILURE MODES:

C1. BUCKLING OF THE VERTICAL SUPPORT COLUMNS.
C2. SHEARING OFF OF ANCHOR BOLTS DURING EARTH QUAKE
C3. OVERTURNING DURING EARTH QUAKE.

APPENDIX C-1
COLUMN BUCKLING

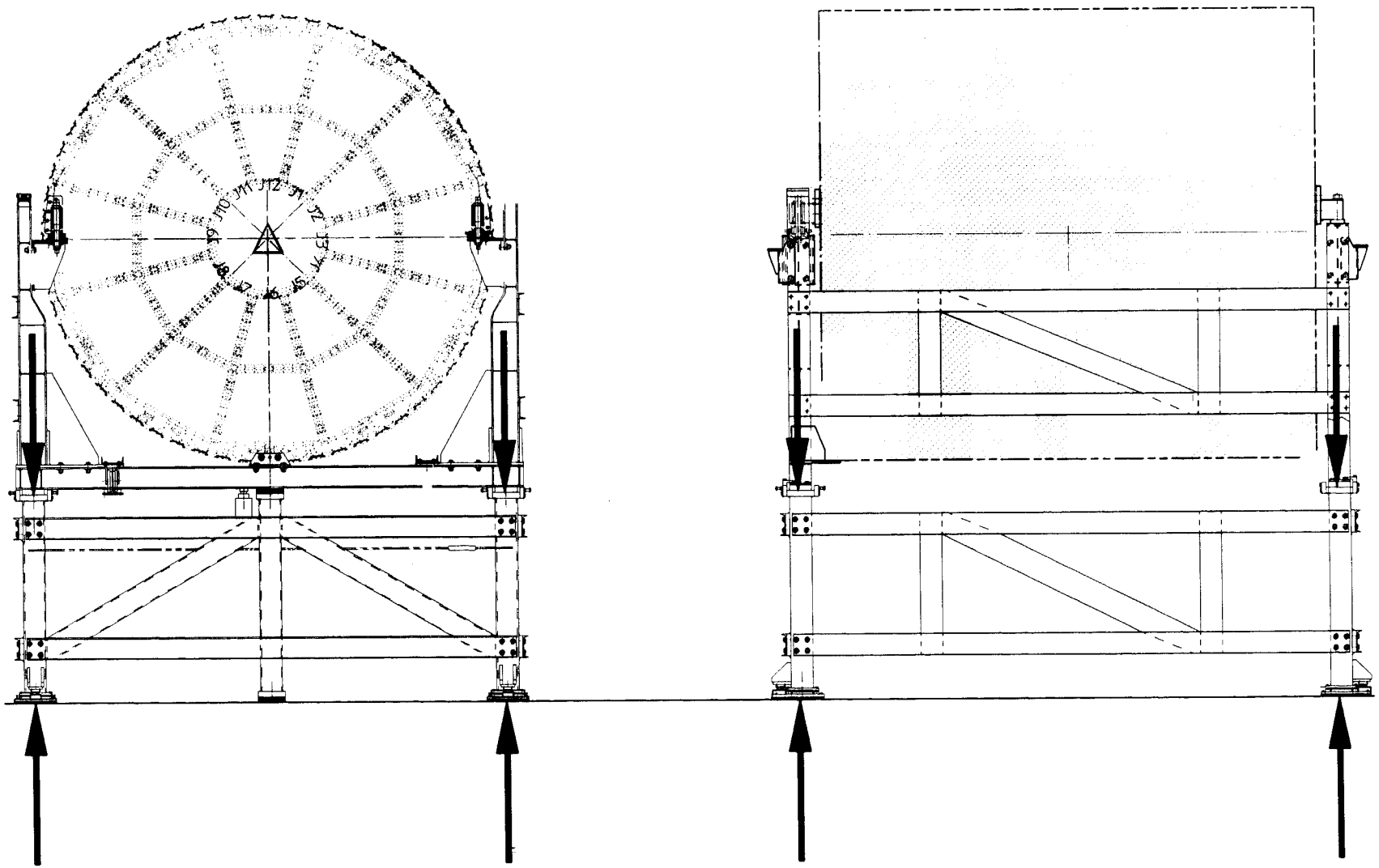

APPENDIX C-2

SHEAR OFF ANCHOR BOLTS

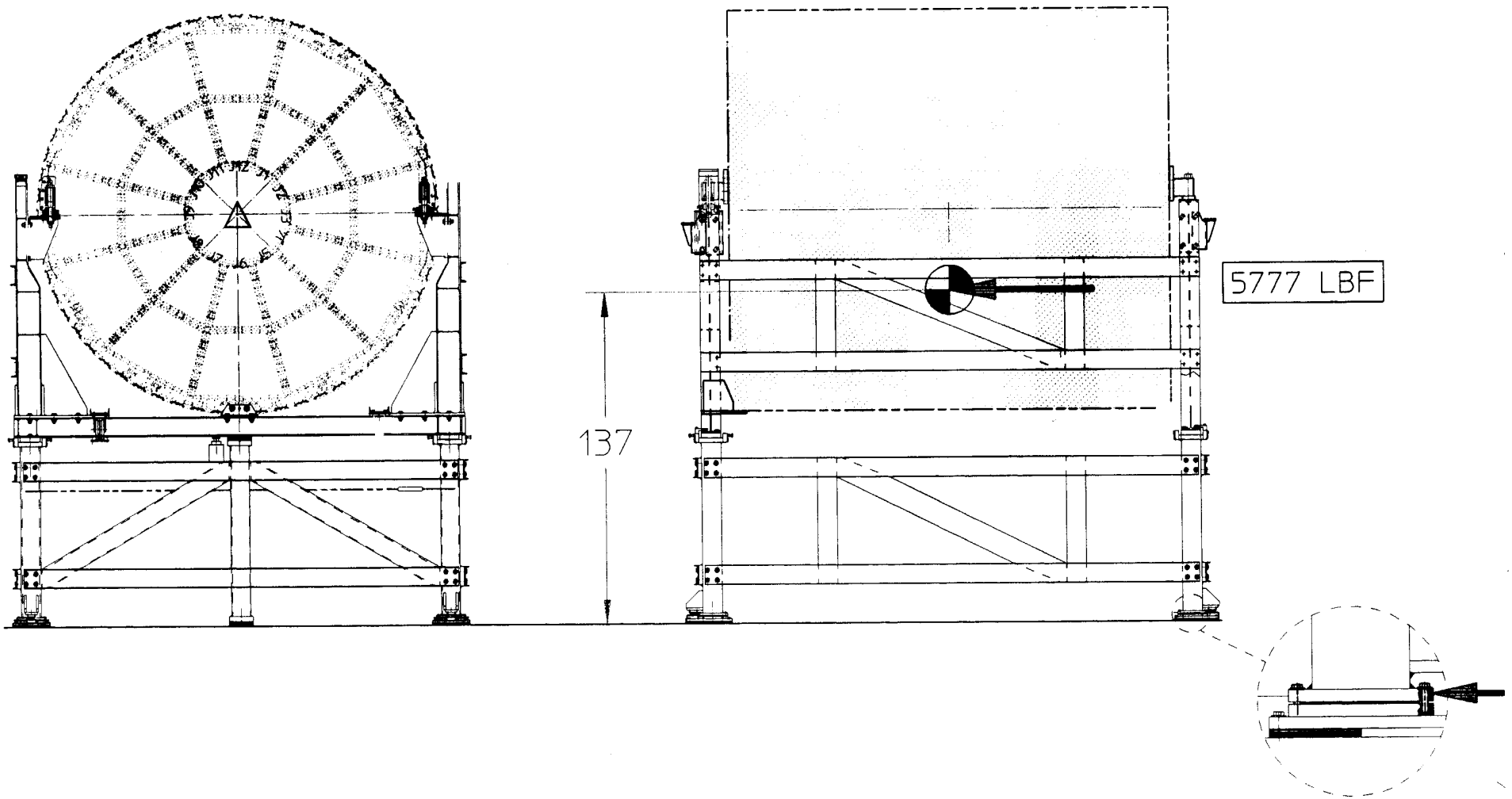

APPENDIX C-3
OVERTURNING

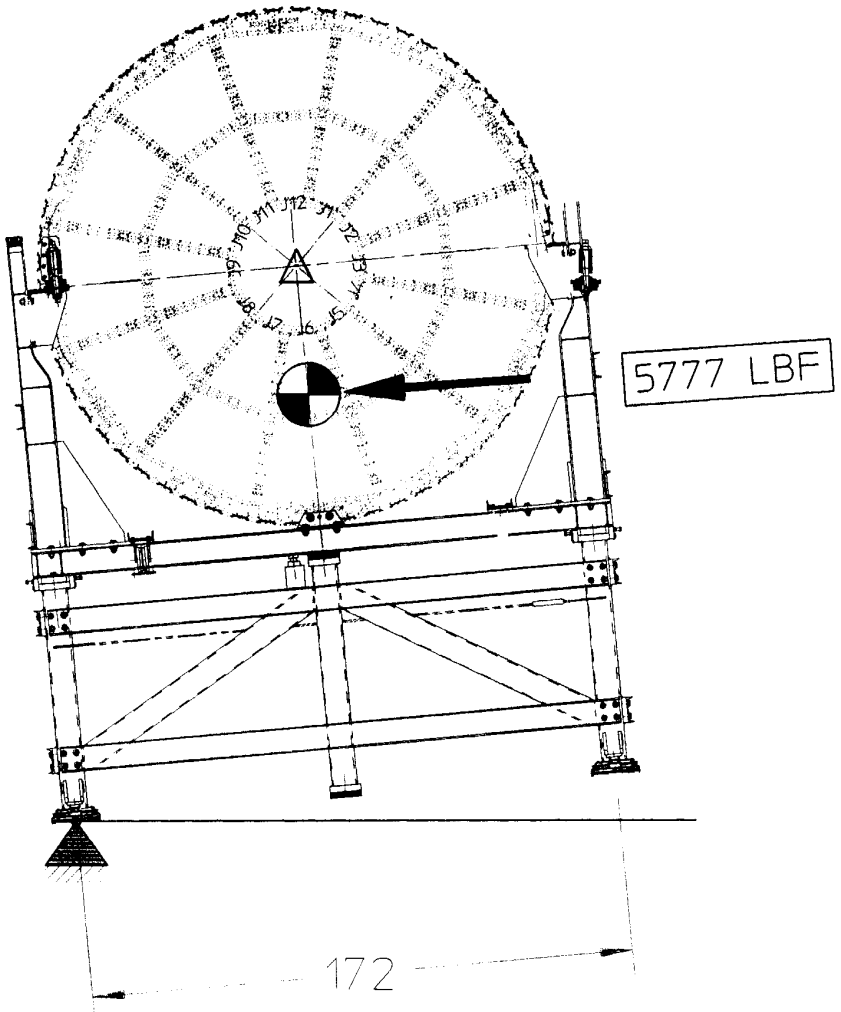

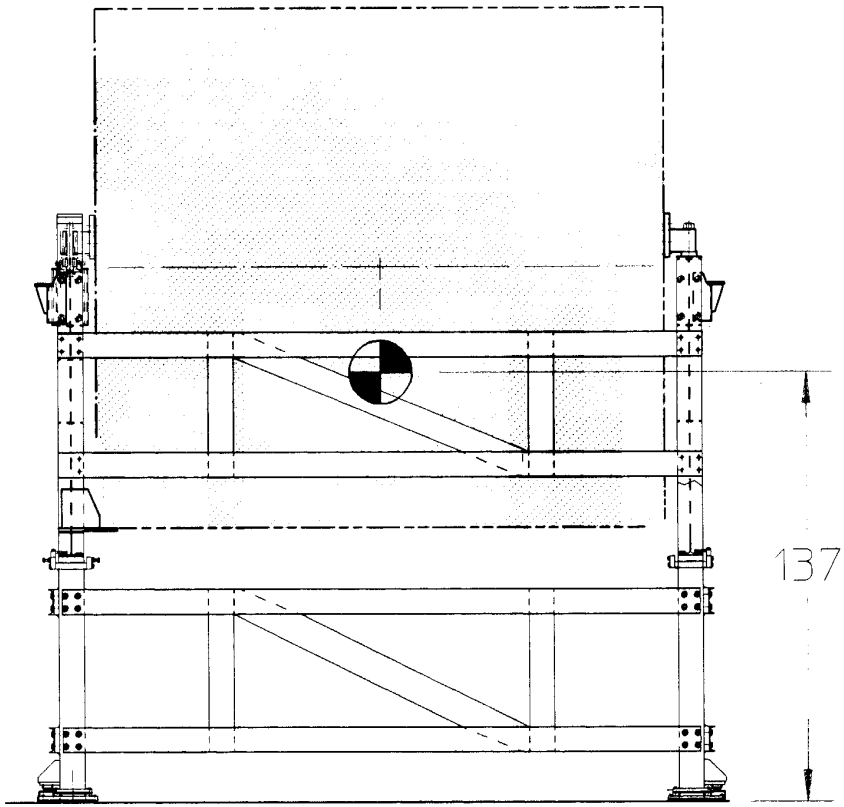

APPENDIX D

FEA ANALYSIS

D1. STRESS IN THE SIDE FRAME DUE TO EARTHQUAKE SIDE LOAD

D1.1 SIDE FRAME-ANSYS LOG FILE
D1.2 SIDE FRAME-MODEL WITH LOADING/BOUNDARY CONDITIONS
D1.3 SIDE FRAME-GRAPHICAL RESULTS, BENDING
D1.4 SIDE FRAME-ELEMENTAL STRESSES TABLE
D1.5 SIDE FRAME-DIRECT AXIAL STRESS OVERLAID ON MODEL
D1.6 SIDE FRAME-MAX. STRESS OVERLAID ON MODEL

D2. STRESS IN THE END FRAME DUE TO EARTHQUAKE SIDE LOAD.

D2.1 END FRAME-ANSYS LOG FILE
D2.2 END FRAME-MODEL WITH LOADING/BOUNDARY CONDITIONS
D2.3 END FRAME-GRAPHICAL RESULTS, BENDING
D2.4 END FRAME-ELEMENTAL STRESSES TABLE
D2.5 END FRAME-DIRECT AXIAL STRESS OVERLAID ON MODEL
D2.6 END FRAME-MAX. STRESS OVERLAID ON MODEL

```
/
!/COM,ANSYS RELEASE  5.3    UP071096          13:40:11    10/19/1998
/PREP7
!-----------------------------------------------------------------
!
!  FEA ANALYSIS OF LOWER SUPPORT STAND - SIDE FRAME
!
!-----------------------------------------------------------------
k,1,0,0
k,2,0,18
k,3,47.5,18
k,4,149.5,18
k,5,102+(2*47.5),18
k,6,197,0
k,7,0,62
k,8,47.5,62
k,9,149.5,62
k,10,197,62
k,11,0,102
k,12,47.5,102
k,13,149.5,102
k,14,197,102
k,15,0,140
k,16,47.5,140
k,17,149.5,140
k,18,197,140
l,1,2
l,2,7
l,7,11
l,11,15
l,3,8
l,12,16
l,4,9
l,13,17
l,6,5
l,5,10
l,10,14
l,14,18
l,15,16
l,16,17
l,17,18
l,11,12
l,12,13
l,13,14
l,7,8
l,8,9
l,9,10
l,2,3
l,3,4
l,4,5
l,16,13
l,8,4
!*
ESIZE,0,1,
ET,1,BEAM3
!*
KEYOPT,1,6,1
KEYOPT,1,9,0
KEYOPT,1,10,0
!*
R,1,4.04,32.6,8,0,0,0,
R,2,13.9,124,8,0,0,0,
!-----------------------
! MATERIAL PROPERTIES
!-----------------------
UIMP,1,EX, , ,30000000,
```

```
UIMP,1,DENS, , , ,
UIMP,1,ALPX, , , ,
UIMP,1,REFT, , , ,
UIMP,1,NUXY, , , ,
UIMP,1,PRXY, , , ,
UIMP,1,GXY, , , ,
UIMP,1,MU, , , ,
UIMP,1,DAMP, , , ,
UIMP,1,KXX, , , ,
UIMP,1,C, , , ,
UIMP,1,ENTH, , , ,
UIMP,1,HF, , , ,
UIMP,1,EMIS, , , ,
UIMP,1,QRATE, , , ,
UIMP,1,RSVX, , , ,
UIMP,1,VISC, , , ,
UIMP,1,SONC, , , ,
!*
type,1
FLST,2,18,4,ORDE,4
FITEM,2,5
FITEM,2,-8
FITEM,2,13
FITEM,2,-26
LMESH,P51X
real,2
type,1
FLST,2,8,4,ORDE,4
FITEM,2,1
FITEM,2,-4
FITEM,2,9
FITEM,2,-12
LMESH,P51X
!------------------------
! SET BOUNDARY CONDITIONS
!------------------------
FLST,2,2,1,ORDE,2
FITEM,2,17
FITEM,2,-18
D,P51X, , , , , ,UX,UY
!------------------------
! SET LOADS
!------------------------
! EARTH QUAKE SIDE FORCE
!------------------------
FLST,2,1,1,ORDE,1
FITEM,2,9
F,P51X,FX,5777/2,
!------------------------
! WEIGHT OF TPC
!------------------------
FLST,2,2,3,ORDE,2
FITEM,2,15
FITEM,2,18
FK,P51X,FY,-4543,
!------------------------
! WEIGHT OF TEST STAND
!------------------------
FLST,2,2,3,ORDE,2
FITEM,2,7
FITEM,2,10
FK,P51X,FY,-1353.5,
FINISH
/SOLU
! /STAT,SOLU
SOLVE
```

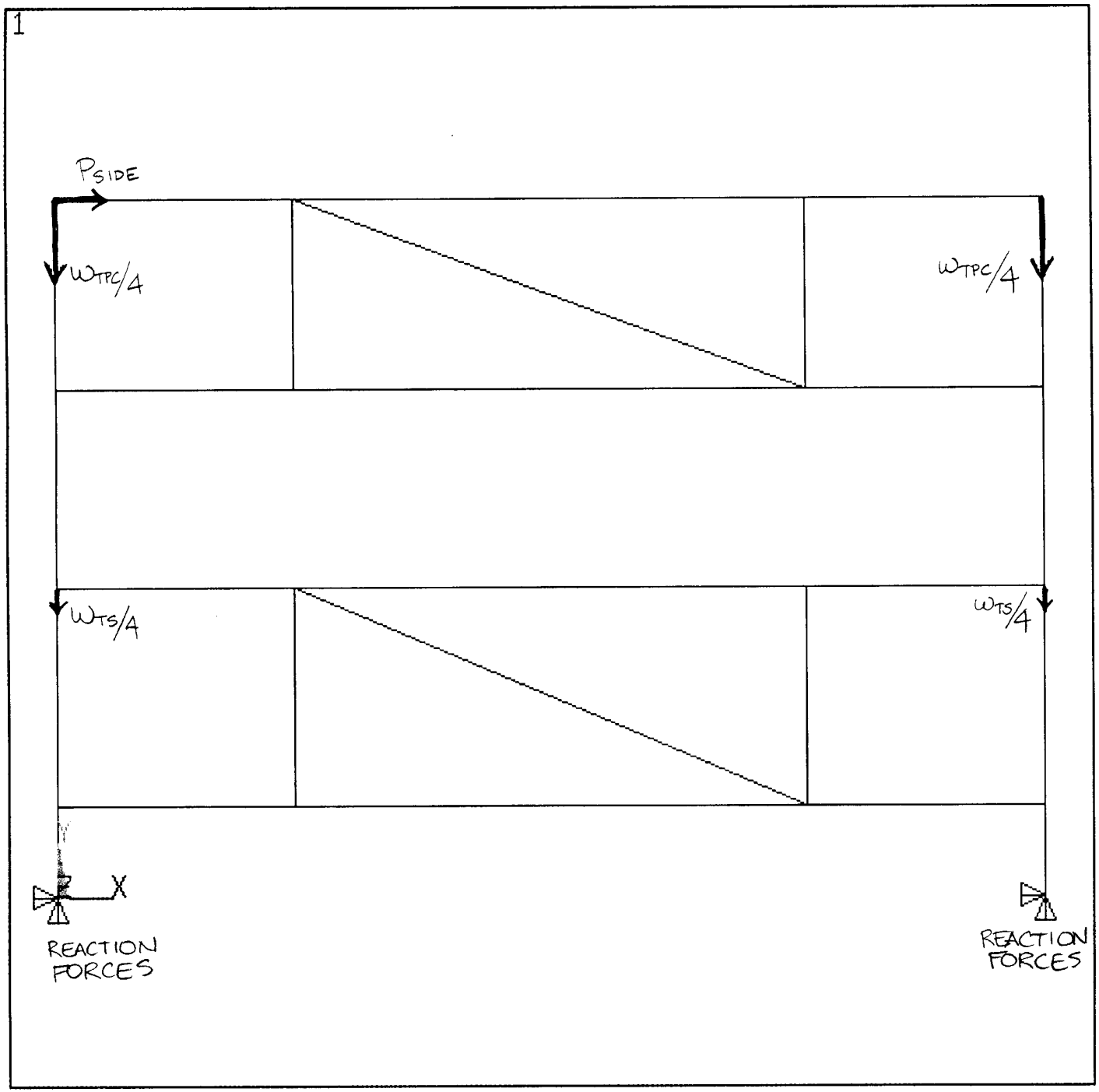

ANSYS 5.3
OCT 20 1998
13:17:49
ELEMENTS
TYPE NUM
U
F

ZV =1
DIST=108.35
XF =98.5
YF =70
Z-BUFFER

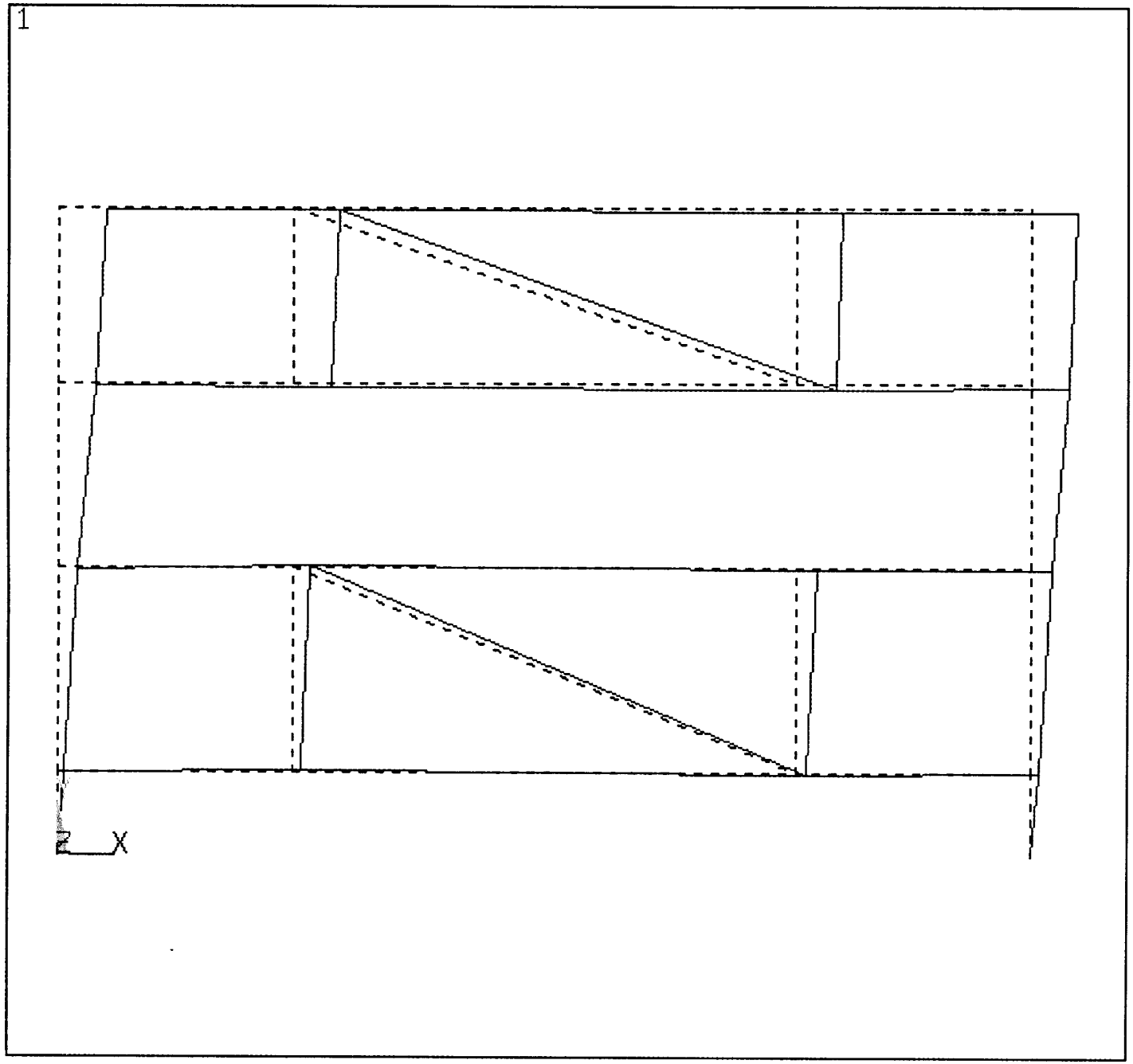

ANSYS 5.3
OCT 20 1998
11:39:46
DISPLACEMENT
STEP=1
SUB =1
TIME=1
RSYS=0
DMX =.024336

DSCA=404.748
ZV =1
DIST=113.478
XF =103.162
YF =69.723
Z-BUFFER

PRINT ELEM ELEMENT SOLUTION PER ELEMENT

***** POST1 ELEMENT SOLUTION LISTING *****

LOAD STEP 1 SUBSTEP= 1
TIME= 1.0000 LOAD CASE= 0

EL= 1 NODES= 1 2 MAT= 1
BEAM3

TEMP =	0.00	0.00	0.00	0.00
LOCATION	MFORX	MFORY	MMOMZ
1 (I)	539.99	-525.79	-11245.
2 (J)	539.99	-525.79	11890.
LOCATION	SDIR	SBYT	SBYB
1 (I)	133.66	1379.8	-1379.8
2 (J)	133.66	-1458.8	1458.8
LOCATION	SMAX	SMIN	
1 (I)	1513.5	-1246.1	
2 (J)	1592.5	-1325.2	
LOCATION	EPELDIR	EPELBYT	EPELBYB
1 (I)	0.000004	0.000046	-0.000046
2 (J)	0.000004	-0.000049	0.000049
LOCATION	EPTHDIR	EPTHBYT	EPTHBYB
1 (I)	0.000000	0.000000	0.000000
2 (J)	0.000000	0.000000	0.000000

EPINAXL = 0.000000

EL= 2 NODES= 3 4 MAT= 1
BEAM3

TEMP =	0.00	0.00	0.00	0.00
LOCATION	MFORX	MFORY	MMOMZ
1 (I)	510.87	-474.88	-9300.8
2 (J)	510.87	-474.88	8744.6
LOCATION	SDIR	SBYT	SBYB
1 (I)	126.45	1141.2	-1141.2
2 (J)	126.45	-1073.0	1073.0
LOCATION	SMAX	SMIN	
1 (I)	1267.6	-1014.7	
2 (J)	1199.4	-946.51	
LOCATION	EPELDIR	EPELBYT	EPELBYB
1 (I)	0.000004	0.000038	-0.000038
2 (J)	0.000004	-0.000036	0.000036
LOCATION	EPTHDIR	EPTHBYT	EPTHBYB
1 (I)	0.000000	0.000000	0.000000
2 (J)	0.000000	0.000000	0.000000

EPINAXL = 0.000000

EL= 3 NODES= 5 6 MAT= 1
BEAM3

TEMP =	0.00	0.00	0.00	0.00
LOCATION	MFORX	MFORY	MMOMZ
1 (I)	555.46	-524.84	-11854.
2 (J)	555.46	-524.84	11238.
LOCATION	SDIR	SBYT	SBYB
1 (I)	137.49	1454.5	-1454.5
2 (J)	137.49	-1378.9	1378.9
LOCATION	SMAX	SMIN	
1 (I)	1592.0	-1317.0	
2 (J)	1516.4	-1241.5	
LOCATION	EPELDIR	EPELBYT	EPELBYB
1 (I)	0.000005	0.000048	-0.000048
2 (J)	0.000005	-0.000046	0.000046
LOCATION	EPTHDIR	EPTHBYT	EPTHBYB
1 (I)	0.000000	0.000000	0.000000
2 (J)	0.000000	0.000000	0.000000

SDIR - AXIAL DIRECT STRESS

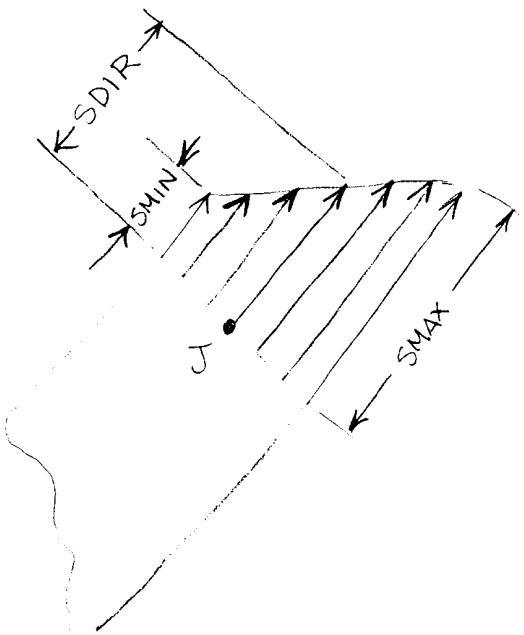

EPINAXL = 0.000000

EL= 4 NODES= 7 8 MAT= 1
BEAM3

TEMP =	0.00	0.00	0.00	0.00
LOCATION	MFORX	MFORY		MMOMZ
1 (I)	264.48	-453.41		-9422.2
2 (J)	264.48	-453.41		7807.4
LOCATION	SDIR	SBYT		SBYB
1 (I)	65.465	1156.1		-1156.1
2 (J)	65.465	-957.96		957.96
LOCATION	SMAX	SMIN		
1 (I)	1221.6	-1090.6		
2 (J)	1023.4	-892.50		
LOCATION	EPELDIR	EPELBYT		EPELBYB
1 (I)	0.000002	0.000039		-0.000039
2 (J)	0.000002	-0.000032		0.000032
LOCATION	EPTHDIR	EPTHBYT		EPTHBYB
1 (I)	0.000000	0.000000		0.000000
2 (J)	0.000000	0.000000		0.000000

EPINAXL = 0.000000

EL= 5 NODES= 9 4 MAT= 1
BEAM3

TEMP =	0.00	0.00	0.00	0.00
LOCATION	MFORX	MFORY		MMOMZ
1 (I)	-2930.5	338.64		9055.5
2 (J)	-2930.5	338.64		-7029.9
LOCATION	SDIR	SBYT		SBYB
1 (I)	-725.37	-1111.1		1111.1
2 (J)	-725.37	862.57		-862.57
LOCATION	SMAX	SMIN		
1 (I)	385.73	-1836.5		
2 (J)	137.20	-1587.9		
LOCATION	EPELDIR	EPELBYT		EPELBYB
1 (I)	-0.000024	-0.000037		0.000037
2 (J)	-0.000024	0.000029		-0.000029
LOCATION	EPTHDIR	EPTHBYT		EPTHBYB
1 (I)	0.000000	0.000000		0.000000
2 (J)	0.000000	0.000000		0.000000

EPINAXL = 0.000000

EL= 6 NODES= 4 8 MAT= 1
BEAM3

TEMP =	0.00	0.00	0.00	0.00
LOCATION	MFORX	MFORY		MMOMZ
1 (I)	-237.25	24.879		1401.3
2 (J)	-237.25	24.879		-1136.3
LOCATION	SDIR	SBYT		SBYB
1 (I)	-58.724	-171.94		171.94
2 (J)	-58.724	139.43		-139.43
LOCATION	SMAX	SMIN		
1 (I)	113.22	-230.66		
2 (J)	80.702	-198.15		
LOCATION	EPELDIR	EPELBYT		EPELBYB
1 (I)	-0.000002	-0.000006		0.000006
2 (J)	-0.000002	0.000005		-0.000005
LOCATION	EPTHDIR	EPTHBYT		EPTHBYB
1 (I)	0.000000	0.000000		0.000000
2 (J)	0.000000	0.000000		0.000000

EPINAXL = 0.000000

EL= 7 NODES= 8 10 MAT= 1
BEAM3

TEMP =	0.00	0.00	0.00	0.00
LOCATION	MFORX	MFORY		MMOMZ

```
 1 (I)     216.17       289.36       6671.1
 2 (J)     216.17       289.36      -7073.3
LOCATION    SDIR         SBYT         SBYB
 1 (I)     53.506      -818.54       818.54
 2 (J)     53.506       867.89      -867.89
LOCATION    SMAX         SMIN
 1 (I)     872.04      -765.03
 2 (J)     921.40      -814.38
LOCATION  EPELDIR      EPELBYT      EPELBYB
 1 (I)    0.000002    -0.000027     0.000027
 2 (J)    0.000002     0.000029    -0.000029
LOCATION  EPTHDIR      EPTHBYT      EPTHBYB
 1 (I)    0.000000     0.000000     0.000000
 2 (J)    0.000000     0.000000     0.000000
EPINAXL =     0.000000

EL=      8  NODES=     11      3  MAT=  1
                                     BEAM3
TEMP =     0.00     0.00     0.00     0.00
LOCATION  MFORX        MFORY        MMOMZ
 1 (I)    1445.2       512.82       15487.
 2 (J)    1445.2       512.82      -8871.8
LOCATION    SDIR         SBYT         SBYB
 1 (I)     357.72      -1900.2       1900.2
 2 (J)     357.72       1088.6      -1088.6
LOCATION    SMAX         SMIN
 1 (I)     2258.0      -1542.5
 2 (J)     1446.3      -730.84
LOCATION  EPELDIR      EPELBYT      EPELBYB
 1 (I)    0.000012    -0.000063     0.000063
 2 (J)    0.000012     0.000036    -0.000036
LOCATION  EPTHDIR      EPTHBYT      EPTHBYB
 1 (I)    0.000000     0.000000     0.000000
 2 (J)    0.000000     0.000000     0.000000
EPINAXL =     0.000000

EL=      9  NODES=      3      7  MAT=  1
                                     BEAM3
TEMP =     0.00     0.00     0.00     0.00
LOCATION  MFORX        MFORY        MMOMZ
 1 (I)    970.32       1.9458       428.94
 2 (J)    970.32       1.9458       230.47
LOCATION    SDIR         SBYT         SBYB
 1 (I)     240.18      -52.631       52.631
 2 (J)     240.18      -28.278       28.278
LOCATION    SMAX         SMIN
 1 (I)     292.81       187.55
 2 (J)     268.46       211.90
LOCATION  EPELDIR      EPELBYT      EPELBYB
 1 (I)    0.000008    -0.000002     0.000002
 2 (J)    0.000008    -0.000001     0.000001
LOCATION  EPTHDIR      EPTHBYT      EPTHBYB
 1 (I)    0.000000     0.000000     0.000000
 2 (J)    0.000000     0.000000     0.000000
EPINAXL =     0.000000

EL=     10  NODES=      7     12  MAT=  1
                                     BEAM3
TEMP =     0.00     0.00     0.00     0.00
LOCATION  MFORX        MFORY        MMOMZ
 1 (I)   -1701.5       562.10       10151.
 2 (J)   -1701.5       562.10      -16548.
LOCATION    SDIR         SBYT         SBYB
 1 (I)    -421.15      -1245.6       1245.6
 2 (J)    -421.15       2030.5      -2030.5
LOCATION    SMAX         SMIN
```

```
 1 (I)     824.41      -1666.7
 2 (J)     1609.3      -2451.6
LOCATION   EPELDIR      EPELBYT      EPELBYB
 1 (I)    -0.000014    -0.000042     0.000042
 2 (J)    -0.000014     0.000068    -0.000068
LOCATION   EPTHDIR      EPTHBYT      EPTHBYB
 1 (I)     0.000000     0.000000     0.000000
 2 (J)     0.000000     0.000000     0.000000
EPINAXL =     0.000000

EL=     11  NODES=     13      2  MAT=  1
                                      BEAM3
TEMP =     0.00     0.00     0.00     0.00
LOCATION   MFORX        MFORY        MMOMZ
 1 (I)    -1817.7       651.57       18684.
 2 (J)    -1817.7       651.57      -12266.
LOCATION    SDIR         SBYT         SBYB
 1 (I)    -449.93      -2292.5       2292.5
 2 (J)    -449.93       1505.0      -1505.0
LOCATION    SMAX         SMIN
 1 (I)     1842.5      -2742.4
 2 (J)     1055.1      -1955.0
LOCATION   EPELDIR      EPELBYT      EPELBYB
 1 (I)    -0.000015    -0.000076     0.000076
 2 (J)    -0.000015     0.000050    -0.000050
LOCATION   EPTHDIR      EPTHBYT      EPTHBYB
 1 (I)     0.000000     0.000000     0.000000
 2 (J)     0.000000     0.000000     0.000000
EPINAXL =     0.000000

EL=     12  NODES=      2      6  MAT=  1
                                      BEAM3
TEMP =     0.00     0.00     0.00     0.00
LOCATION   MFORX        MFORY        MMOMZ
 1 (I)     1475.5       9.4296       280.34
 2 (J)     1475.5       9.4296      -681.48
LOCATION    SDIR         SBYT         SBYB
 1 (I)     365.22      -34.398       34.398
 2 (J)     365.22       83.617      -83.617
LOCATION    SMAX         SMIN
 1 (I)     399.62       330.83
 2 (J)     448.84       281.61
LOCATION   EPELDIR      EPELBYT      EPELBYB
 1 (I)     0.000012    -0.000001     0.000001
 2 (J)     0.000012     0.000003    -0.000003
LOCATION   EPTHDIR      EPTHBYT      EPTHBYB
 1 (I)     0.000000     0.000000     0.000000
 2 (J)     0.000000     0.000000     0.000000
EPINAXL =     0.000000

EL=     13  NODES=      6     14  MAT=  1
                                      BEAM3
TEMP =     0.00     0.00     0.00     0.00
LOCATION   MFORX        MFORY        MMOMZ
 1 (I)     2000.3       564.89       10557.
 2 (J)     2000.3       564.89      -16275.
LOCATION    SDIR         SBYT         SBYB
 1 (I)     495.13      -1295.3       1295.3
 2 (J)     495.13       1997.0      -1997.0
LOCATION    SMAX         SMIN
 1 (I)     1790.5      -800.20
 2 (J)     2492.1      -1501.9
LOCATION   EPELDIR      EPELBYT      EPELBYB
 1 (I)     0.000017    -0.000043     0.000043
 2 (J)     0.000017     0.000067    -0.000067
LOCATION   EPTHDIR      EPTHBYT      EPTHBYB
```

```
 1 (I)     0.000000     0.000000     0.000000
 2 (J)     0.000000     0.000000     0.000000
EPINAXL =     0.000000

EL=     14  NODES=     15      1  MAT=  1
                                      BEAM3
TEMP =     0.00     0.00     0.00     0.00
LOCATION   MFORX         MFORY         MMOMZ
 1 (I)     1656.9        549.71        15433.
 2 (J)     1656.9        549.71       -10678.
LOCATION    SDIR          SBYT          SBYB
 1 (I)     410.13       -1893.7        1893.7
 2 (J)     410.13        1310.2       -1310.2
LOCATION    SMAX          SMIN
 1 (I)     2303.8       -1483.5
 2 (J)     1720.3       -900.07
LOCATION   EPELDIR       EPELBYT       EPELBYB
 1 (I)     0.000014     -0.000063     0.000063
 2 (J)     0.000014      0.000044    -0.000044
LOCATION   EPTHDIR       EPTHBYT       EPTHBYB
 1 (I)     0.000000      0.000000     0.000000
 2 (J)     0.000000      0.000000     0.000000
EPINAXL =     0.000000

EL=     15  NODES=      1      5  MAT=  1
                                      BEAM3
TEMP =     0.00     0.00     0.00     0.00
LOCATION   MFORX         MFORY         MMOMZ
 1 (I)     1131.1        9.7249        567.21
 2 (J)     1131.1        9.7249       -424.73
LOCATION    SDIR          SBYT          SBYB
 1 (I)     279.99       -69.597        69.597
 2 (J)     279.99        52.114       -52.114
LOCATION    SMAX          SMIN
 1 (I)     349.58        210.39
 2 (J)     332.10        227.87
LOCATION   EPELDIR       EPELBYT       EPELBYB
 1 (I)     0.000009     -0.000002     0.000002
 2 (J)     0.000009      0.000002    -0.000002
LOCATION   EPTHDIR       EPTHBYT       EPTHBYB
 1 (I)     0.000000      0.000000     0.000000
 2 (J)     0.000000      0.000000     0.000000
EPINAXL =     0.000000

EL=     16  NODES=      5     16  MAT=  1
                                      BEAM3
TEMP =     0.00     0.00     0.00     0.00
LOCATION   MFORX         MFORY         MMOMZ
 1 (I)    -2161.1        636.39        11962.
 2 (J)    -2161.1        636.39       -18267.
LOCATION    SDIR          SBYT          SBYB
 1 (I)    -534.93       -1467.8        1467.8
 2 (J)    -534.93        2241.3       -2241.3
LOCATION    SMAX          SMIN
 1 (I)     932.82       -2002.7
 2 (J)     1706.4       -2776.2
LOCATION   EPELDIR       EPELBYT       EPELBYB
 1 (I)    -0.000018     -0.000049     0.000049
 2 (J)    -0.000018      0.000075    -0.000075
LOCATION   EPTHDIR       EPTHBYT       EPTHBYB
 1 (I)     0.000000      0.000000     0.000000
 2 (J)     0.000000      0.000000     0.000000
EPINAXL =     0.000000

EL=     17  NODES=      4      7  MAT=  1
                                      BEAM3
```

```
TEMP =     0.00     0.00     0.00     0.00
LOCATION   MFORX        MFORY        MMOMZ
 1 (I)    -2366.7      -1.7020       313.40
 2 (J)    -2366.7      -1.7020       498.66
LOCATION    SDIR         SBYT         SBYB
 1 (I)    -585.81      -38.454       38.454
 2 (J)    -585.81      -61.185       61.185
LOCATION    SMAX         SMIN
 1 (I)    -547.36      -624.26
 2 (J)    -524.62      -646.99
LOCATION   EPELDIR      EPELBYT      EPELBYB
 1 (I)    -0.000020    -0.000001     0.000001
 2 (J)    -0.000020    -0.000002     0.000002
LOCATION   EPTHDIR      EPTHBYT      EPTHBYB
 1 (I)     0.000000     0.000000     0.000000
 2 (J)     0.000000     0.000000     0.000000
EPINAXL =     0.000000

EL=     18  NODES=      2      5  MAT=  1
                                      BEAM3
TEMP =     0.00     0.00     0.00     0.00
LOCATION   MFORX        MFORY        MMOMZ
 1 (I)    -3009.3      -10.706      -656.80
 2 (J)    -3009.3      -10.706       532.47
LOCATION    SDIR         SBYT         SBYB
 1 (I)    -744.88       80.589      -80.589
 2 (J)    -744.88      -65.334       65.334
LOCATION    SMAX         SMIN
 1 (I)    -664.29      -825.47
 2 (J)    -679.55      -810.21
LOCATION   EPELDIR      EPELBYT      EPELBYB
 1 (I)    -0.000025     0.000003    -0.000003
 2 (J)    -0.000025    -0.000002     0.000002
LOCATION   EPTHDIR      EPTHBYT      EPTHBYB
 1 (I)     0.000000     0.000000     0.000000
 2 (J)     0.000000     0.000000     0.000000
EPINAXL =     0.000000

EL=     19  NODES=     17     15  MAT=  1
                                      BEAM3
TEMP =     0.00     0.00     0.00     0.00
LOCATION   MFORX        MFORY        MMOMZ
 1 (I)    -3843.8      -1242.4      0.72760E-11
 2 (J)    -3843.8      -1242.4       22364.
LOCATION    SDIR         SBYT         SBYB
 1 (I)    -276.53     -0.23471E-12 0.23471E-12
 2 (J)    -276.53      -721.42       721.42
LOCATION    SMAX         SMIN
 1 (I)    -276.53      -276.53
 2 (J)     444.89      -997.95
LOCATION   EPELDIR      EPELBYT      EPELBYB
 1 (I)    -0.000009     0.000000     0.000000
 2 (J)    -0.000009    -0.000024     0.000024
LOCATION   EPTHDIR      EPTHBYT      EPTHBYB
 1 (I)     0.000000     0.000000     0.000000
 2 (J)     0.000000     0.000000     0.000000
EPINAXL =     0.000000

EL=     20  NODES=     15     13  MAT=  1
                                      BEAM3
TEMP =     0.00     0.00     0.00     0.00
LOCATION   MFORX        MFORY        MMOMZ
 1 (I)    -4393.5       414.50       6930.7
 2 (J)    -4393.5       414.50      -11307.
LOCATION    SDIR         SBYT         SBYB
 1 (I)    -316.08      -223.57       223.57
```

```
 2 (J)    -316.08        364.73        364.73
LOCATION    SMAX          SMIN
 1 (I)    -92.506       -539.65
 2 (J)     48.669       -680.82
LOCATION  EPELDIR       EPELBYT       EPELBYB
 1 (I)   -0.000011     -0.000007     0.000007
 2 (J)   -0.000011      0.000012    -0.000012
LOCATION  EPTHDIR       EPTHBYT       EPTHBYB
 1 (I)    0.000000      0.000000      0.000000
 2 (J)    0.000000      0.000000      0.000000
EPINAXL =     0.000000

EL=     21  NODES=     13     11  MAT=  1
                                     BEAM3
TEMP =     0.00     0.00     0.00     0.00
LOCATION  MFORX         MFORY         MMOMZ
 1 (I)   -3691.5       -1403.2       -29991.
 2 (J)   -3691.5       -1403.2        26138.
LOCATION    SDIR          SBYT          SBYB
 1 (I)   -265.58        967.44       -967.44
 2 (J)   -265.58       -843.15        843.15
LOCATION    SMAX          SMIN
 1 (I)    701.87       -1233.0
 2 (J)    577.57       -1108.7
LOCATION  EPELDIR       EPELBYT       EPELBYB
 1 (I)   -0.000009     0.000032    -0.000032
 2 (J)   -0.000009    -0.000028     0.000028
LOCATION  EPTHDIR       EPTHBYT       EPTHBYB
 1 (I)    0.000000      0.000000      0.000000
 2 (J)    0.000000      0.000000      0.000000
EPINAXL =     0.000000

EL=     22  NODES=     11      9  MAT=  1
                                     BEAM3
TEMP =     0.00     0.00     0.00     0.00
LOCATION  MFORX         MFORY         MMOMZ
 1 (I)   -4204.4        41.983        10651.
 2 (J)   -4204.4        41.983        9055.5
LOCATION    SDIR          SBYT          SBYB
 1 (I)   -302.47       -343.57        343.57
 2 (J)   -302.47       -292.11        292.11
LOCATION    SMAX          SMIN
 1 (I)    41.103       -646.05
 2 (J)   -10.360       -594.58
LOCATION  EPELDIR       EPELBYT       EPELBYB
 1 (I)   -0.000010    -0.000011     0.000011
 2 (J)   -0.000010    -0.000010     0.000010
LOCATION  EPTHDIR       EPTHBYT       EPTHBYB
 1 (I)    0.000000      0.000000      0.000000
 2 (J)    0.000000      0.000000      0.000000
EPINAXL =     0.000000

EL=     23  NODES=     18     16  MAT=  1
                                     BEAM3
TEMP =     0.00     0.00     0.00     0.00
LOCATION  MFORX         MFORY         MMOMZ
 1 (I)   -7949.2       -1646.1      0.29104E-10
 2 (J)   -7949.2       -1646.1        29629.
LOCATION    SDIR          SBYT          SBYB
 1 (I)   -571.89     -0.93883E-12  0.93883E-12
 2 (J)   -571.89       -955.77        955.77
LOCATION    SMAX          SMIN
 1 (I)   -571.89       -571.89
 2 (J)    383.89       -1527.7
LOCATION  EPELDIR       EPELBYT       EPELBYB
 1 (I)   -0.000019     0.000000      0.000000
```

```
 2 (J)   -0.000019    -0.000032     0.000032
LOCATION  EPTHDIR      EPTHBYT      EPTHBYB
 1 (I)    0.000000     0.000000     0.000000
 2 (J)    0.000000     0.000000     0.000000
EPINAXL =     0.000000

EL=    24  NODES=     16     14  MAT=  1
                                    BEAM3
TEMP =     0.00     0.00     0.00     0.00
LOCATION  MFORX        MFORY        MMOMZ
 1 (I)   -7312.8       515.06       11363.
 2 (J)   -7312.8       515.06      -11300.
LOCATION   SDIR         SBYT         SBYB
 1 (I)   -526.10      -366.53       366.53
 2 (J)   -526.10       364.52      -364.52
LOCATION   SMAX         SMIN
 1 (I)   -159.57      -892.64
 2 (J)   -161.59      -890.62
LOCATION  EPELDIR      EPELBYT      EPELBYB
 1 (I)   -0.000018    -0.000012     0.000012
 2 (J)   -0.000018     0.000012    -0.000012
LOCATION  EPTHDIR      EPTHBYT      EPTHBYB
 1 (I)    0.000000     0.000000     0.000000
 2 (J)    0.000000     0.000000     0.000000
EPINAXL =     0.000000

EL=    25  NODES=     14     12  MAT=  1
                                    BEAM3
TEMP =     0.00     0.00     0.00     0.00
LOCATION  MFORX        MFORY        MMOMZ
 1 (I)   -5394.5      -1485.3      -27575.
 2 (J)   -5394.5      -1485.3       31836.
LOCATION   SDIR         SBYT         SBYB
 1 (I)   -388.09       889.53      -889.53
 2 (J)   -388.09      -1027.0       1027.0
LOCATION   SMAX         SMIN
 1 (I)    501.44      -1277.6
 2 (J)    638.88      -1415.1
LOCATION  EPELDIR      EPELBYT      EPELBYB
 1 (I)   -0.000013     0.000030    -0.000030
 2 (J)   -0.000013    -0.000034     0.000034
LOCATION  EPTHDIR      EPTHBYT      EPTHBYB
 1 (I)    0.000000     0.000000     0.000000
 2 (J)    0.000000     0.000000     0.000000
EPINAXL =     0.000000

EL=    26  NODES=     12     10  MAT=  1
                                    BEAM3
TEMP =     0.00     0.00     0.00     0.00
LOCATION  MFORX        MFORY        MMOMZ
 1 (I)   -4832.4       216.17       15288.
 2 (J)   -4832.4       216.17       7073.3
LOCATION   SDIR         SBYT         SBYB
 1 (I)   -347.65      -493.15       493.15
 2 (J)   -347.65      -228.17       228.17
LOCATION   SMAX         SMIN
 1 (I)    145.50      -840.80
 2 (J)   -119.48      -575.82
LOCATION  EPELDIR      EPELBYT      EPELBYB
 1 (I)   -0.000012    -0.000016     0.000016
 2 (J)   -0.000012    -0.000008     0.000008
LOCATION  EPTHDIR      EPTHBYT      EPTHBYB
 1 (I)    0.000000     0.000000     0.000000
 2 (J)    0.000000     0.000000     0.000000
EPINAXL =     0.000000
```

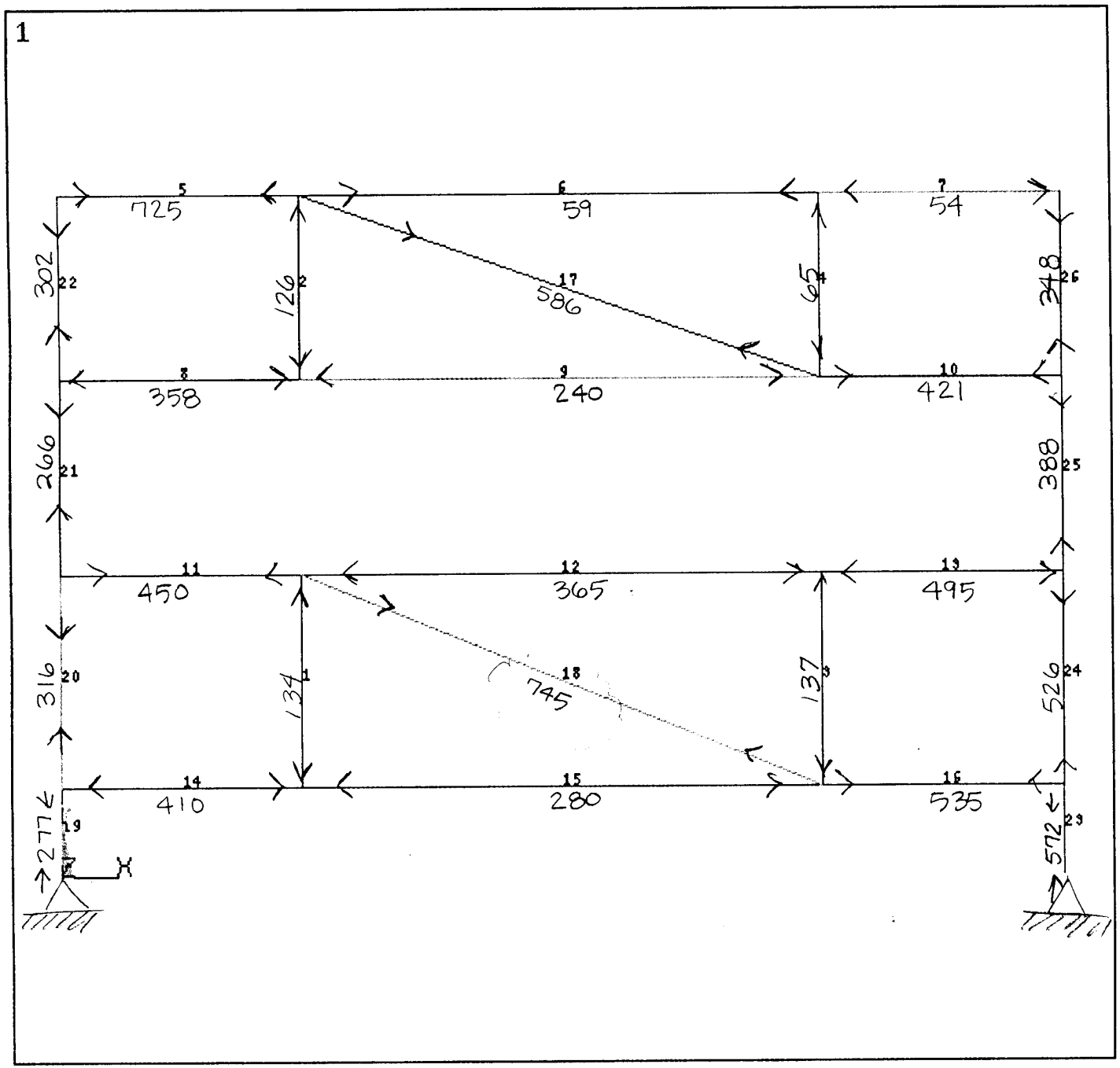

ANSYS 5.3
OCT 19 1998
14:28:27
ELEMENTS
ELEM NUM

ZV =1
DIST=108.35
XF =98.5
YF =70
Z-BUFFER

AXIAL DIRECT
STRESS

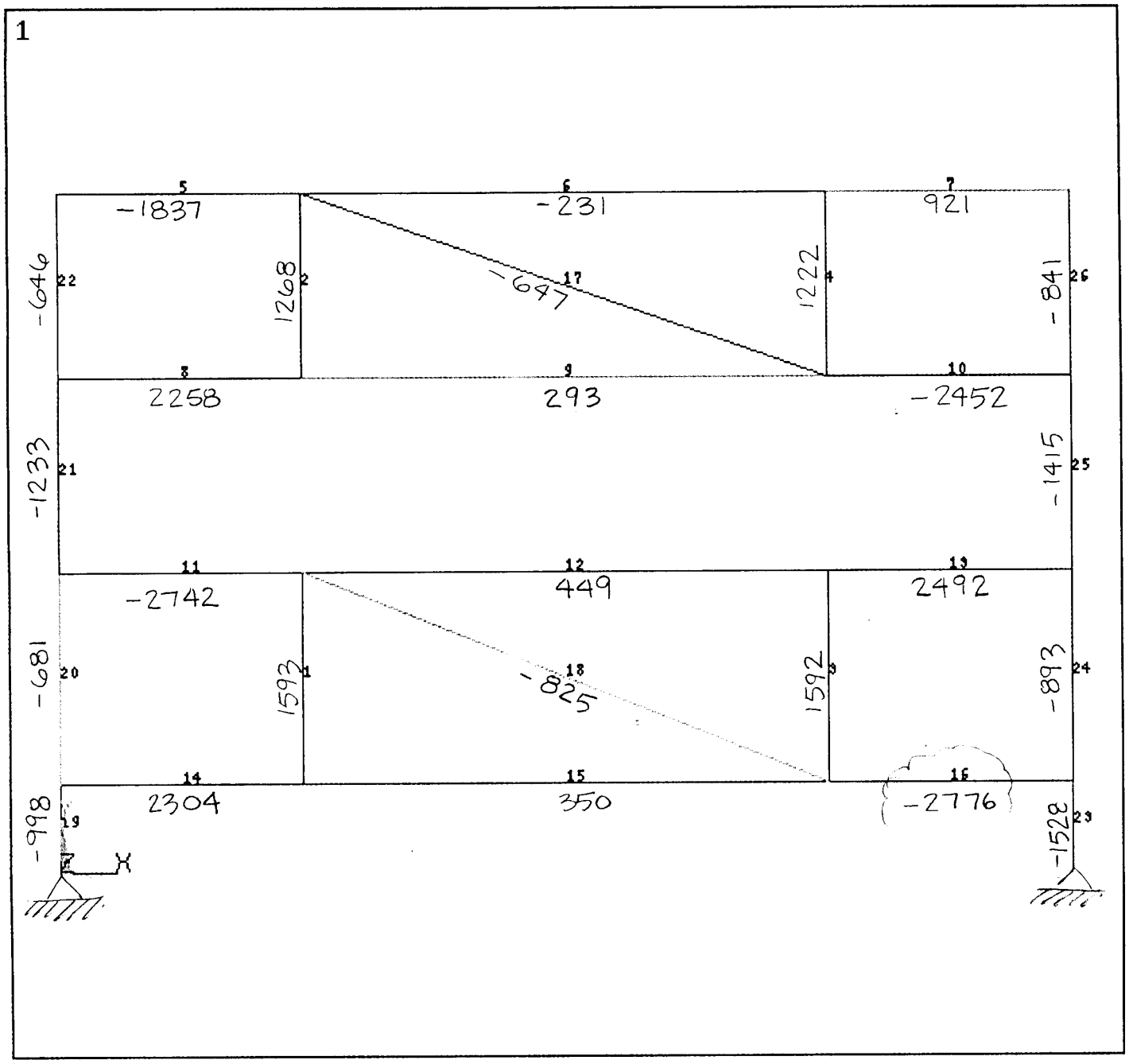

ANSYS 5.3
OCT 19 1998
14:28:27
ELEMENTS
ELEM NUM

ZV =1
DIST=108.35
XF =98.5
YF =70
Z-BUFFER

MAX STRESS =
DIRECT STRESS +
BENDING STRESS

```
!-----------------------------------------------------
!
!   FEA ANALYSIS OF LOWER SUPPORT STAND - END FRAME
!
!-----------------------------------------------------
/PREP7
k,1,0,0
k,2,172,0
k,3,  0,20
k,4, 86,20
k,5,172,20
k,6,  0,64
k,7, 86,64
k,8,172,64
k,9,  0,82.4
!k,10,86,82.4
k,11,172,82.4
k,12, 0,170
k,13,172,170
l,1,3
l,3,6
l,6,9
l,9,12
l,4,7
!l,7,10
l,2,5
l,5,8
l,8,11
l,11,13
l,3,4
l,4,5
l,6,7
l,7,8
!l,9,10
!l,10,11
l,9,11
l,12,13
l,3,7
l,7,5
!l,12,10
!l,10,13
ESIZE,0,1,
ET,1,BEAM3
!-------------------------------
!  BEAM CROSS-SECTION PROPERTIES
!-------------------------------
! 8X13.75 CHANNEL
!-----------------
R,1,4.04,32.6,8
!-----------------
! 8X8 BOX BEAM
!-----------------
R,2,13.9,124,8
!-----------------
! 8W35 - I BEAM
!-----------------
R,3,10.2,36.1,8
!--------------------------------
!  MATERIAL PROPERTIES
!--------------------------------
UIMP,1,EX,,,30E6
!---------------------------
! CROSS-SECTIONAL PROPERTIES
!---------------------------
! SET CHANNEL
!------------
```

```
REAL,1
LMESH,10,13
LMESH,16,17
LMESH,5
!--------------
! SET BOX BEAM
!--------------
REAL,2
LMESH,1,3
LMESH,6,8
!--------------
! SET I BEAM
!--------------
REAL,3
LMESH,14,15
LMESH,4
LMESH,9
!---------------------------
!SET CONSTRAINTS
!---------------------------
FLST,2,2,3,ORDE,2
FITEM,2,1
FITEM,2,-2
DK,P51X, , , ,0,UX,UY
!---------------------------
! ADD LOADS
!---------------------------
! ADD TPC WEIGHT
!---------------
FLST,2,2,3,ORDE,2
FITEM,2,12
FITEM,2,-13
FK,P51X,FY,-4543,
!----------------------
! ADD TEST STAND WEIGHT
!----------------------
FLST,2,2,3,ORDE,2
FITEM,2,9
FITEM,2,11
FK,P51X,FY,-1353.5,
!ADD TPC SIDE LOAD
FLST,2,2,3,ORDE,2
FITEM,2,12
FITEM,2,-13
FK,P51X,FX,908.6,
!---------------------------
!ADD TEST & LOWER STAND SIDE LOAD
!---------------------------
FLST,2,2,3,ORDE,2
FITEM,2,9
FITEM,2,11
FK,P51X,FX,536,
FINISH
/SOLU
SOLVE
```

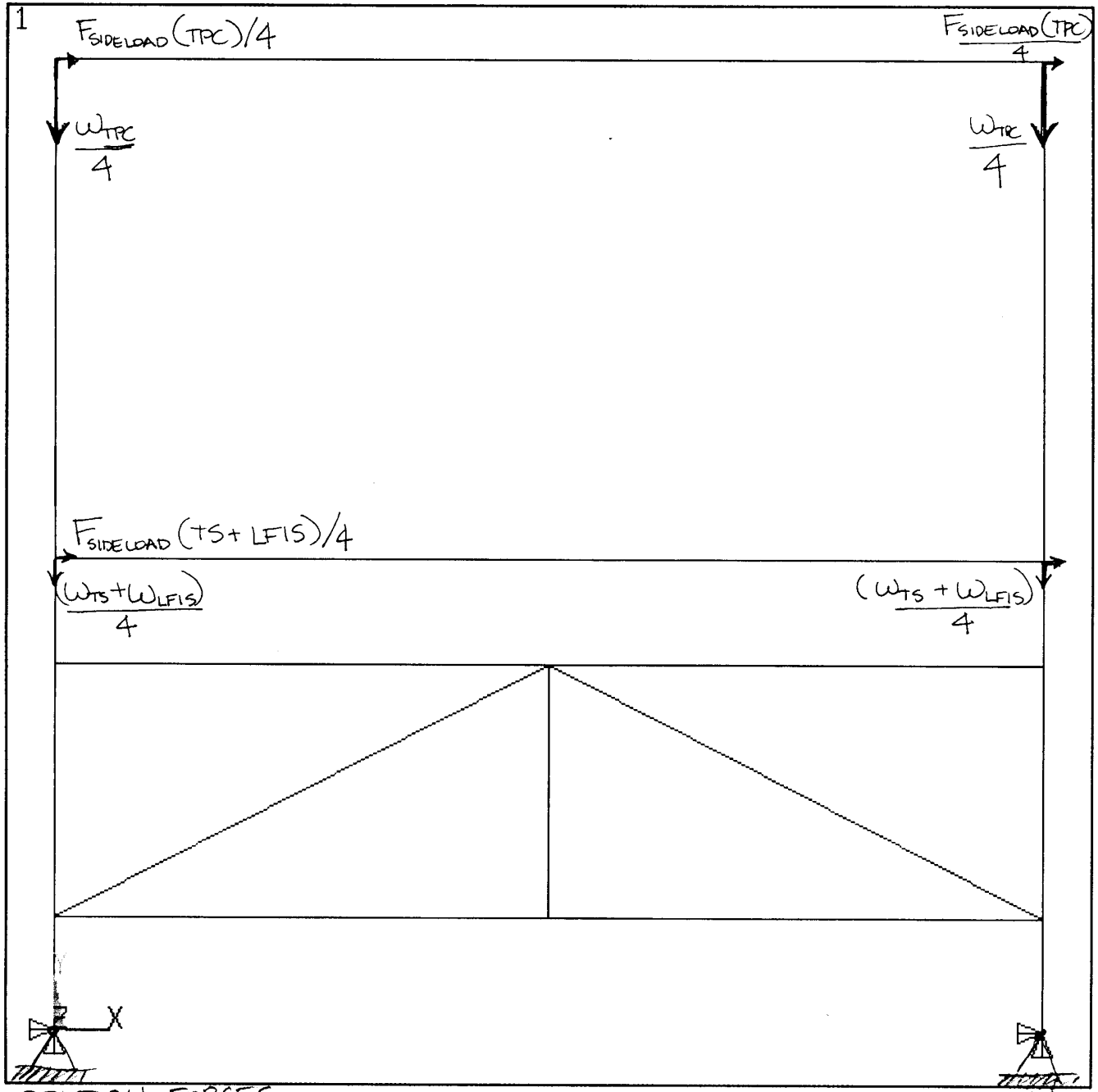

ANSYS 5.3
OCT 20 1998
16:18:25
ELEMENTS
TYPE NUM
U
F

ZV =1
DIST=94.6
XF =86
YF =85
Z-BUFFER

$F_{SIDELOAD(TS+LFIS)}/4$

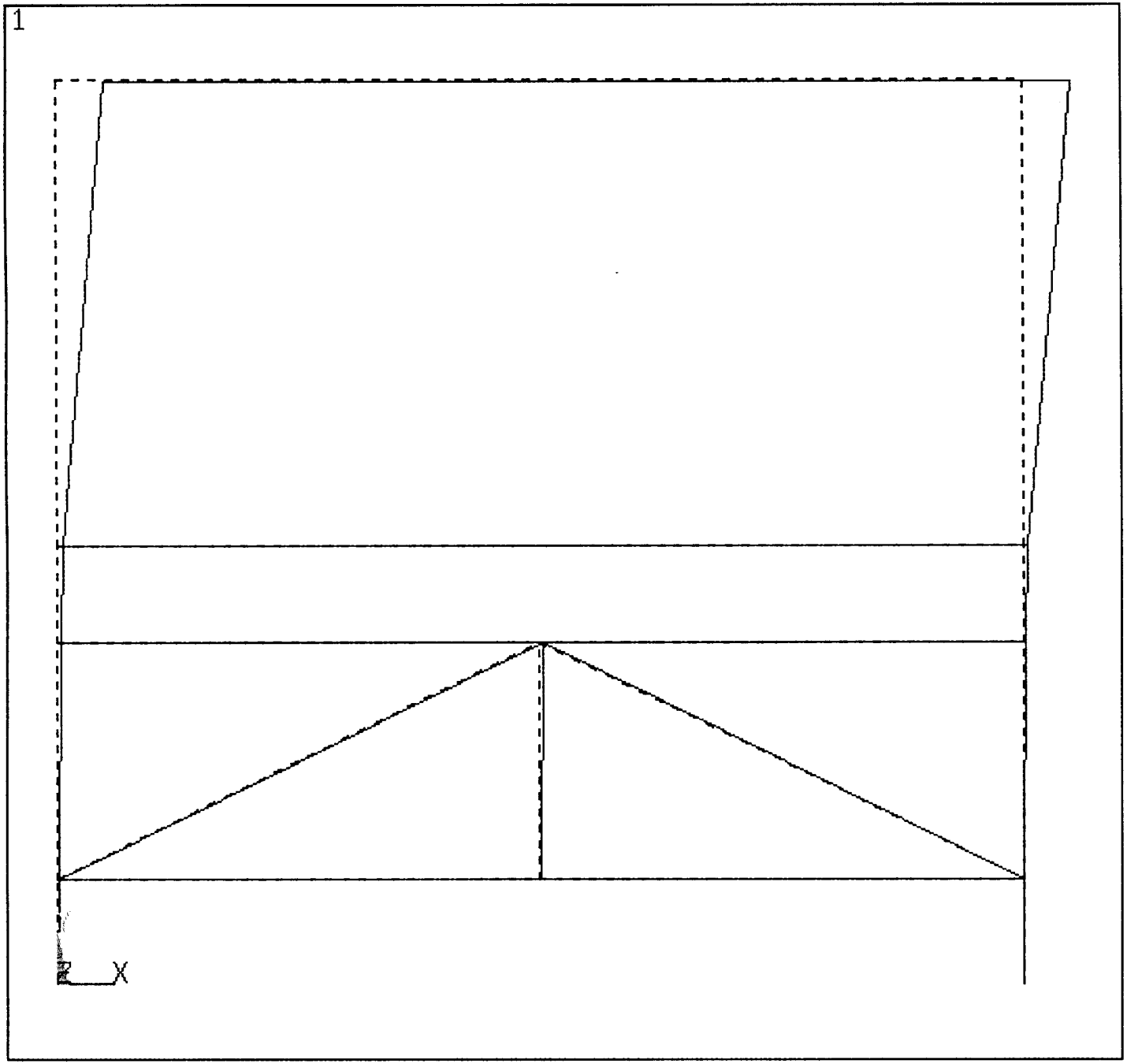

ANSYS 5.3
OCT 22 1998
09:54:31
DISPLACEMENT
STEP=1
SUB =1
TIME=1
RSYS=0
DMX =.121311

DSCA=70.892
ZV =1
DIST=99.329
XF =90.299
YF =84.924
Z-BUFFER

```
PRINT ELEM ELEMENT SOLUTION PER ELEMENT

***** POST1 ELEMENT SOLUTION LISTING *****

 LOAD STEP      1  SUBSTEP=      1
 TIME=    1.0000          LOAD CASE=  0

EL=      1  NODES=      1      2  MAT=  1
                                     BEAM3
TEMP =     0.00     0.00     0.00     0.00
LOCATION    SDIR         SBYT         SBYB
 1 (I)     46.284      -646.53       646.53
 2 (J)     46.284       424.23      -424.23
LOCATION    SMAX         SMIN
 1 (I)     692.81      -600.24
 2 (J)     470.52      -377.95
LOCATION  EPELDIR      EPELBYT      EPELBYB
 1 (I)    0.000002    -0.000022     0.000022
 2 (J)    0.000002     0.000014    -0.000014
LOCATION  EPTHDIR      EPTHBYT      EPTHBYB
 1 (I)    0.000000     0.000000     0.000000
 2 (J)    0.000000     0.000000     0.000000
EPINAXL =     0.000000

EL=      2  NODES=      2      3  MAT=  1
                                     BEAM3
TEMP =     0.00     0.00     0.00     0.00
LOCATION    SDIR         SBYT         SBYB
 1 (I)    -44.739      -431.10       431.10
 2 (J)    -44.739       652.57      -652.57
LOCATION    SMAX         SMIN
 1 (I)     386.37      -475.84
 2 (J)     607.83      -697.31
LOCATION  EPELDIR      EPELBYT      EPELBYB
 1 (I)   -0.000001    -0.000014     0.000014
 2 (J)   -0.000001     0.000022    -0.000022
LOCATION  EPTHDIR      EPTHBYT      EPTHBYB
 1 (I)    0.000000     0.000000     0.000000
 2 (J)    0.000000     0.000000     0.000000
EPINAXL =     0.000000

EL=      3  NODES=      4      5  MAT=  1
                                     BEAM3
TEMP =     0.00     0.00     0.00     0.00
LOCATION    SDIR         SBYT         SBYB
 1 (I)    -725.18      -1340.5       1340.5
 2 (J)    -725.18       586.73      -586.73
LOCATION    SMAX         SMIN
 1 (I)     615.29      -2065.7
 2 (J)    -138.45      -1311.9
LOCATION  EPELDIR      EPELBYT      EPELBYB
 1 (I)   -0.000024    -0.000045     0.000045
 2 (J)   -0.000024     0.000020    -0.000020
LOCATION  EPTHDIR      EPTHBYT      EPTHBYB
 1 (I)    0.000000     0.000000     0.000000
 2 (J)    0.000000     0.000000     0.000000
EPINAXL =     0.000000

EL=      4  NODES=      5      6  MAT=  1
                                     BEAM3
TEMP =     0.00     0.00     0.00     0.00
LOCATION    SDIR         SBYT         SBYB
 1 (I)     723.71      -477.01       477.01
 2 (J)     723.71       1234.2      -1234.2
LOCATION    SMAX         SMIN
```

```
 1 (I)     1200.7       246.70
 2 (J)     1957.9      -510.46
LOCATION   EPELDIR      EPELBYT      EPELBYB
 1 (I)     0.000024    -0.000016     0.000016
 2 (J)     0.000024     0.000041    -0.000041
LOCATION   EPTHDIR      EPTHBYT      EPTHBYB
 1 (I)     0.000000     0.000000     0.000000
 2 (J)     0.000000     0.000000     0.000000
EPINAXL =     0.000000

EL=      5  NODES=      1      5  MAT=  1
                                      BEAM3
TEMP =     0.00     0.00     0.00     0.00
LOCATION    SDIR         SBYT         SBYB
 1 (I)     761.75      -353.63       353.63
 2 (J)     761.75       30.652      -30.652
LOCATION    SMAX         SMIN
 1 (I)     1115.4       408.12
 2 (J)     792.40       731.09
LOCATION   EPELDIR      EPELBYT      EPELBYB
 1 (I)     0.000025    -0.000012     0.000012
 2 (J)     0.000025     0.000001    -0.000001
LOCATION   EPTHDIR      EPTHBYT      EPTHBYB
 1 (I)     0.000000     0.000000     0.000000
 2 (J)     0.000000     0.000000     0.000000
EPINAXL =     0.000000

EL=      6  NODES=      5      3  MAT=  1
                                      BEAM3
TEMP =     0.00     0.00     0.00     0.00
LOCATION    SDIR         SBYT         SBYB
 1 (I)    -771.84      -35.563       35.563
 2 (J)    -771.84       357.80      -357.80
LOCATION    SMAX         SMIN
 1 (I)    -736.27      -807.40
 2 (J)    -414.04      -1129.6
LOCATION   EPELDIR      EPELBYT      EPELBYB
 1 (I)    -0.000026    -0.000001     0.000001
 2 (J)    -0.000026     0.000012    -0.000012
LOCATION   EPTHDIR      EPTHBYT      EPTHBYB
 1 (I)     0.000000     0.000000     0.000000
 2 (J)     0.000000     0.000000     0.000000
EPINAXL =     0.000000

EL=      7  NODES=      2      5  MAT=  1
                                      BEAM3
TEMP =     0.00     0.00     0.00     0.00
LOCATION    SDIR         SBYT         SBYB
 1 (I)   -0.30285      855.34      -855.34
 2 (J)   -0.30285     -1130.0       1130.0
LOCATION    SMAX         SMIN
 1 (I)     855.04      -855.64
 2 (J)     1129.6      -1130.3
LOCATION   EPELDIR      EPELBYT      EPELBYB
 1 (I)     0.000000     0.000029    -0.000029
 2 (J)     0.000000    -0.000038     0.000038
LOCATION   EPTHDIR      EPTHBYT      EPTHBYB
 1 (I)     0.000000     0.000000     0.000000
 2 (J)     0.000000     0.000000     0.000000
EPINAXL =     0.000000

EL=      8  NODES=      7      1  MAT=  1
                                      BEAM3
TEMP =     0.00     0.00     0.00     0.00
LOCATION    SDIR         SBYT         SBYB
 1 (I)    -258.05    -0.46942E-12 0.46942E-12
```

```
 2 (J)   -258.05      -927.33       927.33
LOCATION    SMAX         SMIN
 1 (I)   -258.05      -258.05
 2 (J)    669.28      -1185.4
LOCATION  EPELDIR      EPELBYT      EPELBYB
 1 (I)   -0.000009     0.000000     0.000000
 2 (J)   -0.000009    -0.000031     0.000031
LOCATION  EPTHDIR      EPTHBYT      EPTHBYB
 1 (I)    0.000000     0.000000     0.000000
 2 (J)    0.000000     0.000000     0.000000
EPINAXL =     0.000000

EL=      9  NODES=      1      4  MAT=  1
                                      BEAM3
TEMP =     0.00     0.00     0.00     0.00
LOCATION    SDIR         SBYT         SBYB
 1 (I)   -368.27      -664.39       664.39
 2 (J)   -368.27       1428.5      -1428.5
LOCATION    SMAX         SMIN
 1 (I)    296.12      -1032.7
 2 (J)    1060.3      -1796.8
LOCATION  EPELDIR      EPELBYT      EPELBYB
 1 (I)   -0.000012    -0.000022     0.000022
 2 (J)   -0.000012     0.000048    -0.000048
LOCATION  EPTHDIR      EPTHBYT      EPTHBYB
 1 (I)    0.000000     0.000000     0.000000
 2 (J)    0.000000     0.000000     0.000000
EPINAXL =     0.000000

EL=     10  NODES=      4      8  MAT=  1
                                      BEAM3
TEMP =     0.00     0.00     0.00     0.00
LOCATION    SDIR         SBYT         SBYB
 1 (I)   -381.41       1780.9      -1780.9
 2 (J)   -381.41       917.22      -917.22
LOCATION    SMAX         SMIN
 1 (I)    1399.5      -2162.3
 2 (J)    535.81      -1298.6
LOCATION  EPELDIR      EPELBYT      EPELBYB
 1 (I)   -0.000013     0.000059    -0.000059
 2 (J)   -0.000013     0.000031    -0.000031
LOCATION  EPTHDIR      EPTHBYT      EPTHBYB
 1 (I)    0.000000     0.000000     0.000000
 2 (J)    0.000000     0.000000     0.000000
EPINAXL =     0.000000

EL=     11  NODES=      9      3  MAT=  1
                                      BEAM3
TEMP =     0.00     0.00     0.00     0.00
LOCATION    SDIR         SBYT         SBYB
 1 (I)   -590.37     0.23471E-12-0.23471E-12
 2 (J)   -590.37      -936.67       936.67
LOCATION    SMAX         SMIN
 1 (I)   -590.37      -590.37
 2 (J)    346.30      -1527.0
LOCATION  EPELDIR      EPELBYT      EPELBYB
 1 (I)   -0.000020     0.000000     0.000000
 2 (J)   -0.000020    -0.000031     0.000031
LOCATION  EPTHDIR      EPTHBYT      EPTHBYB
 1 (I)    0.000000     0.000000     0.000000
 2 (J)    0.000000     0.000000     0.000000
EPINAXL =     0.000000

EL=     12  NODES=      3      6  MAT=  1
                                      BEAM3
TEMP =     0.00     0.00     0.00     0.00
```

```
LOCATION    SDIR          SBYT          SBYB
 1 (I)    -478.68       -671.04        671.04
 2 (J)    -478.68        1443.5       -1443.5
LOCATION    SMAX          SMIN
 1 (I)     192.36       -1149.7
 2 (J)     964.81       -1922.2
LOCATION  EPELDIR       EPELBYT       EPELBYB
 1 (I)   -0.000016     -0.000022     0.000022
 2 (J)   -0.000016      0.000048    -0.000048
LOCATION  EPTHDIR       EPTHBYT       EPTHBYB
 1 (I)    0.000000      0.000000     0.000000
 2 (J)    0.000000      0.000000     0.000000
EPINAXL =     0.000000

EL=     13  NODES=      6     10  MAT=  1
                                      BEAM3
TEMP =     0.00     0.00     0.00     0.00
LOCATION    SDIR          SBYT          SBYB
 1 (I)    -467.01        1768.0       -1768.0
 2 (J)    -467.01        916.79       -916.79
LOCATION    SMAX          SMIN
 1 (I)     1300.9       -2235.0
 2 (J)     449.78       -1383.8
LOCATION  EPELDIR       EPELBYT       EPELBYB
 1 (I)   -0.000016      0.000059    -0.000059
 2 (J)   -0.000016      0.000031    -0.000031
LOCATION  EPTHDIR       EPTHBYT       EPTHBYB
 1 (I)    0.000000      0.000000     0.000000
 2 (J)    0.000000      0.000000     0.000000
EPINAXL =     0.000000

EL=     14  NODES=      8     10  MAT=  1
                                      BEAM3
TEMP =     0.00     0.00     0.00     0.00
LOCATION    SDIR          SBYT          SBYB
 1 (I)     1.0304       -1883.7        1883.7
 2 (J)     1.0304        1884.0       -1884.0
LOCATION    SMAX          SMIN
 1 (I)     1884.8       -1882.7
 2 (J)     1885.0       -1883.0
LOCATION  EPELDIR       EPELBYT       EPELBYB
 1 (I)    0.000000     -0.000063     0.000063
 2 (J)    0.000000      0.000063    -0.000063
LOCATION  EPTHDIR       EPTHBYT       EPTHBYB
 1 (I)    0.000000      0.000000     0.000000
 2 (J)    0.000000      0.000000     0.000000
EPINAXL =     0.000000

EL=     15  NODES=     11     12  MAT=  1
                                      BEAM3
TEMP =     0.00     0.00     0.00     0.00
LOCATION    SDIR          SBYT          SBYB
 1 (I)   0.71396E-02  -3785.6        3785.6
 2 (J)   0.71396E-02   3785.4       -3785.4
LOCATION    SMAX          SMIN
 1 (I)     3785.6       -3785.6
 2 (J)     3785.4       -3785.4
LOCATION  EPELDIR       EPELBYT       EPELBYB
 1 (I)    0.000000     -0.000126     0.000126
 2 (J)    0.000000      0.000126    -0.000126
LOCATION  EPTHDIR       EPTHBYT       EPTHBYB
 1 (I)    0.000000      0.000000     0.000000
 2 (J)    0.000000      0.000000     0.000000
EPINAXL =     0.000000

EL=     16  NODES=      8     11  MAT=  1
```

BEAM3

TEMP = 0.00 0.00 0.00 0.00

LOCATION	SDIR	SBYT	SBYB
1 (I)	-406.45	5034.3	-5034.3
2 (J)	-406.45	-3785.6	3785.6

LOCATION	SMAX	SMIN
1 (I)	4627.9	-5440.8
2 (J)	3379.2	-4192.1

LOCATION	EPELDIR	EPELBYT	EPELBYB
1 (I)	-0.000014	0.000168	-0.000168
2 (J)	-0.000014	-0.000126	0.000126

LOCATION	EPTHDIR	EPTHBYT	EPTHBYB
1 (I)	0.000000	0.000000	0.000000
2 (J)	0.000000	0.000000	0.000000

EPINAXL = 0.000000

EL= 17 NODES= 10 12 MAT= 1

BEAM3

TEMP = 0.00 0.00 0.00 0.00

LOCATION	SDIR	SBYT	SBYB
1 (I)	-484.34	5033.1	-5033.1
2 (J)	-484.34	-3785.4	3785.4

LOCATION	SMAX	SMIN
1 (I)	4548.8	-5517.5
2 (J)	3301.0	-4269.7

LOCATION	EPELDIR	EPELBYT	EPELBYB
1 (I)	-0.000016	0.000168	-0.000168
2 (J)	-0.000016	-0.000126	0.000126

LOCATION	EPTHDIR	EPTHBYT	EPTHBYB
1 (I)	0.000000	0.000000	0.000000
2 (J)	0.000000	0.000000	0.000000

EPINAXL = 0.000000

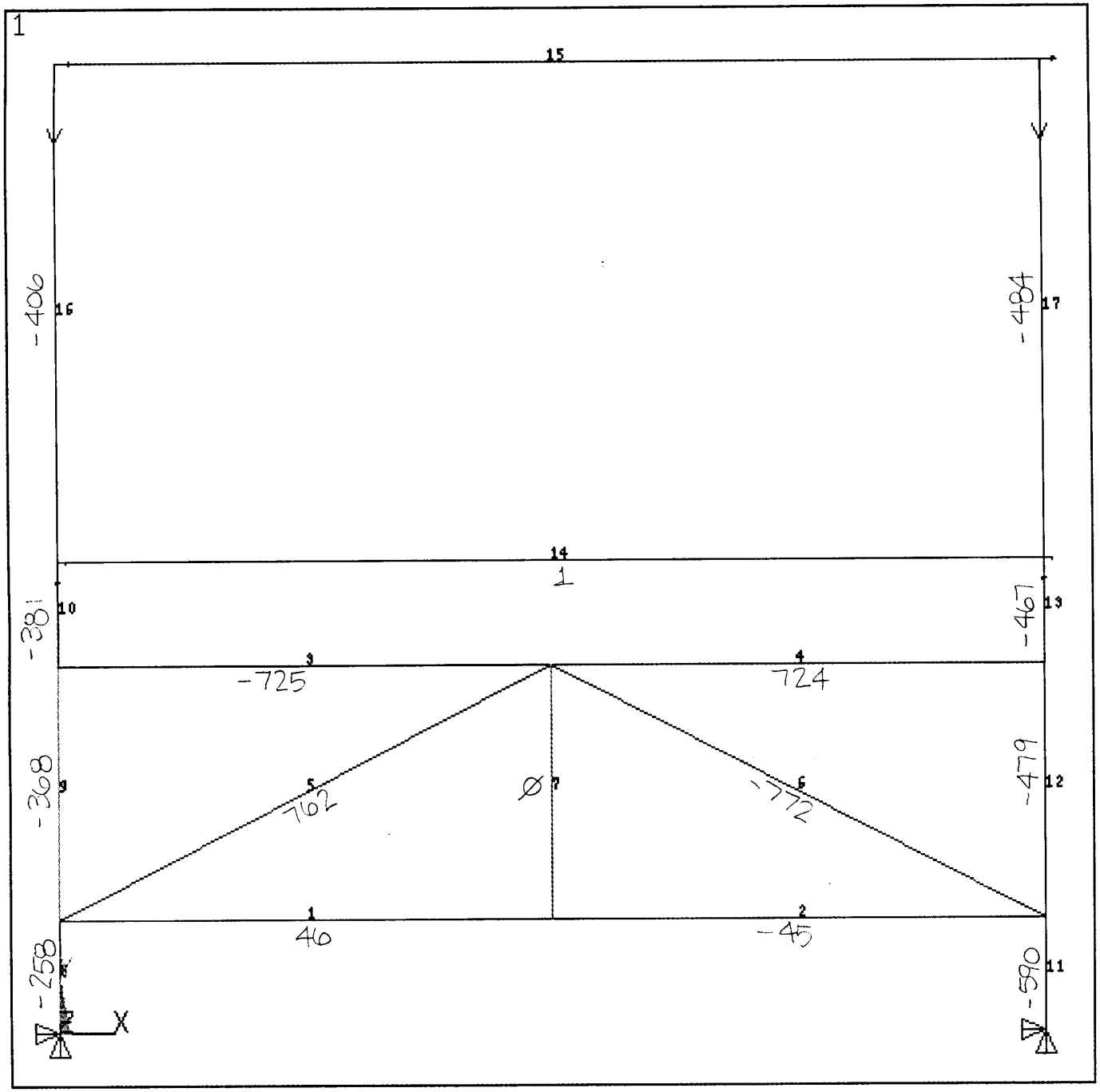

ANSYS 5.3
OCT 22 1998
10:05:18
ELEMENTS
ELEM NUM
U
F

ZV =1
DIST=94.6
XF =86
YF =85
Z-BUFFER

DIRECT AXIAL STRESS

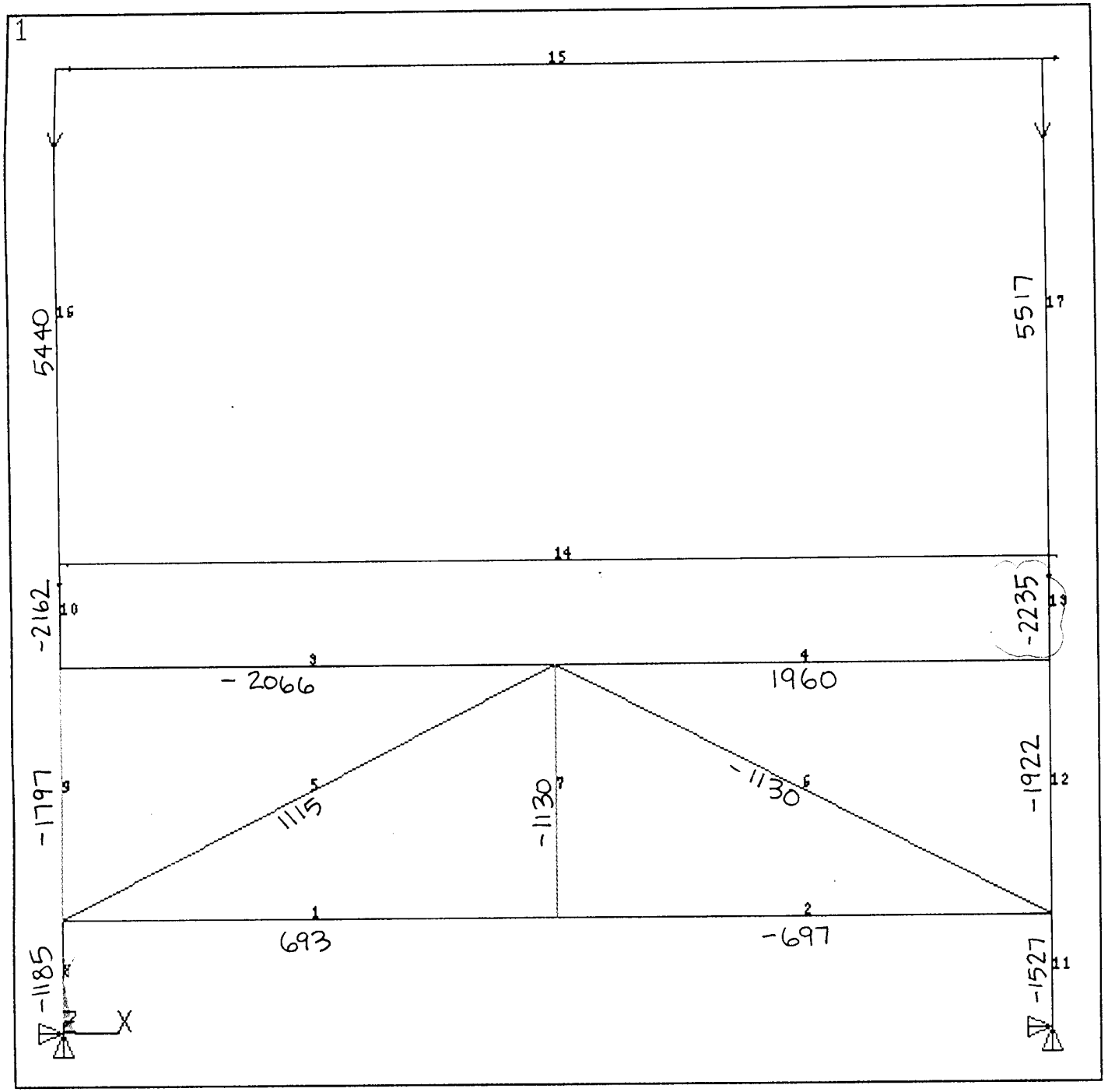

ANSYS 5.3
OCT 22 1998
10:05:18
ELEMENTS
ELEM NUM
U
F

ZV =1
DIST=94.6
XF =86
YF =85
Z-BUFFER

$\sigma_{max} = \sigma_{direct} + \sigma_{bending}$